Comité d'Étude de la Corrosion et de la Protection des canalisations

www.ceocor.lu

GUIDELINES FOR MEASUREMENT TECHNIQUES IN CATHODIC PROTECTION

Published in
2001

Foreword

When laid in an unfavourable environment, pipelines may be unusable well before the end of their expected lifetime. The study of corrosion phenomena and the development of appropriate means of protection led to the creation in 1944 in Luxembourg, of the ***"Study committee for corrosion and cathodic protection of pipelines" – CEOCOR***.
Since then, CEOCOR, whose activities started before European Standardisation [(1)] works, has published numerous directives and recommendations, such as the "Practical Guidelines for cathodic protection", the second edition of which was recently released [(2)].
Cathodic protection is an electrolytic process controlled by man. In fact no technical installation can work with reliability if not accurately controlled and maintained. By their nature, cathodic measures are electrical measurements which in principle are simple and easy to perform; however, it is particularly important to carry them out and interpret them correctly.
In recent years control measurements have been much improved. This is the case, for example, with the so-called "intensive measurements", which make it possible to determine the potential without ohmic IR drop in the soil. In view of the need for more precise results, the authors judged it useful to complete the Practical Guide to Cathodic Protection with this booklet, which concerns the Techniques for Cathodic Protection Measurements.
We are pleased that CEOCOR, Sector A " External Corrosion – Cathodic Protection against Corrosion", has presented this information in a clear and simple way. This has also given an immense service to those who are interested in any way in Cathodic Protection.

Walter G. von Baeckmann

Honorary Member of CEOCOR

ESSEN, January 1994

After the re-organisation of CEOCOR in 1991, Sector A, External Protection against Corrosion – Cathodic Protection, considered one of its important tasks was to produce the booklet **"Guidelines for Measurement Technique in Cathodic Protection".**
This booklet, prepared by a group of specialists from different European countries, will be published in different languages andcomes at the right moment to complete European Standardisation in the field of technical measurements in cathodic protection.
The considerable experience acquired by the authors during their professional activities has made it possible for them to produce this work devoted to the needs of the personnel involved.
In my quality as President of Sector A, I thank all the members of the group,
while expressing on behalf of all of us our sorrow at the death of the

Mr. Werner Prinz

the Leader of the Group who started this work.

Vienna — Franz HOFBAUER

January, 1994 — President of Sector A - CEOCOR

Members of the Working Group and authors of the **Guidelines to the Measurement Techniques in Cathodic Protection.**

D. COPIN (F)	M. LAMBERT (F) +
M. CURTY (F)	F. LEGRAND (F)
L. DI BIASE (I)	Mme H. LIEBGOTT (D)
D. FUNK (D)	W. PRINZ (D) +
F. HOFBAUER (A)	Dr. F. STALDER (CH)

INDEX

I - INTRODUCTION

1.1. Specificity of cathodic protection of buried pipelines

This booklet gives a description of the methods for measuring and control in the field of cathodic protection in order to ensure the permanent effectiveness of the protection of the entire structure. It provides guidelines to localise risk zones and on takingthe appropriate measurements to detect points where cathodic polarisation is insufficient.
Cathodic protection measurements on buried pipelines are quite delicate and expert knowledge is required to interpret them. Many factors impact on the validity of the figures detected. Potential measurements are usually performed at the soil surface and the IR drop between the buried pipe and the reference electrode at the soil level must be taken into account. This IR drop depends on the nature of the soil, on the dimensions and distribution of the faults in the coating, on the presence of external electric fields due to stray currents or the vicinity of other buried metallic structures, both cathodically protected or not.
To obtain a reliable diagnosis of the protection level of a pipeline, there are techniques to :

- *measure Von and Voff and the polarisation potential;*
- *evaluate protective currents or those circulating in the pipeline;*
- *determine the insulation resistance of the pipeline;*
- *measure soil resistance;*
- *localise isolation faults;*
- *evaluate the influence of stray currents (a current due to traction systems or third party cathodic protection installation).*

On the basis of the results obtained, a CP specialist, after eliminating the effect of possible contacts with extraneous structures, could make a technical/economical choice between improving CP systems and rehabilitating deteriorated coating.

1.2. Fundamental criteria for cathodic protection

Cathodic protection aimsto prevent the corrosion of buried or submerged structures. This kind of protection is called “active protection” because it is obtained by sending a unidirectional current through the electrolyte (water or soil) towards the metal to be protected by means of an auxiliary electrode called the anode or ground bed.
This current serves to negatively polarise the metal to a level which renders oxidation impossible.
Cathodic protection criteria are defined in order to establish the limiting point, at which the metal in practice no longer corrodes. Electro-chemical

thermodynamic theory makes it possible to calculate the potential at which the corrosion rate of a metal (steel) becomes insignificant.
This value is -930 mV, considering the iron ion concentration (Fe++) in the electrolyte equal to 1 micromole per litre (0.056 mg/l) and using a Cu/CuSO4 reference electrode.
Tests in laboratory and in the soil have shown that for ijn the case of a potential which has negativity greater than –1 V a negligible degree of corrosion may occur, corresponding to the dissolution of the metal at the rate of 1 - 5 μm per year. This latter potential corresponds to a concentration of a millimole of iron in one litre of water (56 mg/l) and can in practice be considered negligible.
This is the basis for defining a maximum potential of –850 mV as the fundamental criterion for the cathodic protection of carbon steel.

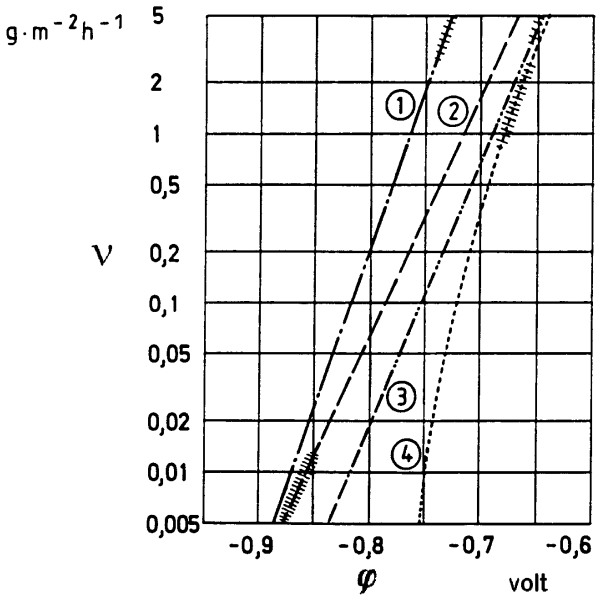

1) sour electrolyte (H2S)
2) neutral electrolyte
3) clayey soil
4) electrolyte: neutral and aerobic

φ = potential
v = rate of mass loss
//////// = III potential evolution without external influence

Fig. 1-1 Corrosion rate of iron in different electrolytes as a function of the potential

When the pipelines are laid in soils with anaerobic conditions and strong bacterial activity (presence of sulphate-reducing bacteria) with the production of sulphurs, it is necessary to further lower the potential by 100 mV to nullify the activity of bacteria. In this particular case, or as a precaution when bacteria activity is a risk, the maximum potential required is therefore –950 mV (Cu/CuSO4).
For structures laid in sandy, well aerated, high resistance homogeneous soils, different criteria for cathodic protection may be adopted.
For soil resistance:
$\rho > 100\ \Omega m$ -> UCu/CuSO4= -0,75 V may be used
$\rho > 1000\ \Omega m$ -> UCu/CuSO4) = - 0,65 V may be used
These potential criteria correspond to potential measurements at the interface limits (phase boundary steel/soil or steel/water). Structure/soil potentials must be measured at the steel/soil or steel/water phase boundary interface.

1.3. Experimental criteria

In some cases three other criteria may be used to measure potential, although these do not offer the same degree of quality and reliability as measurements at the interface steel/electrolyte. These criteria should be employed only in exceptional instances, where they are explicitly requested and their use has been agreed by the parties concerned.

1.3.1. Criteria based on the potential evolution

For old pipelines with poorly isolated coatings needing very high current densities, empirical criteria can be used to define the potential variation, such as a depolarisation of 100 mV after switching OFF the cathodic protection current, or a reduction of the potential by 300 mV once the CP current has been switched ON, after the application of cathodic protection. These criteria, used for poorly isolated structures, do not apply for new pipelines with good insulation .

1.3.2. Curve E = f(log I)

When the structures can be directly contacted to measurements the potential, e.g. casings of wells, the C.P. current needed can be calculated by using the current/potential curve.
In order to obtain this, it’s necessary to lower the potential of the structure gradually. It should be noted, for each step of current, of the corresponding potential thus obtaining the curve E= f(log I) shown in fig. 1.2.

This curve, built in semi-logarithmic co-ordinates, shows two parts sensibly linear.

The first one is associated to very negative figures. The potential variation in function of the current is minimal. This part corresponds to oxygen diffusion. The second one, associated to very negative potentials, is the Tafel slope, which corresponds to hydrogen evolution (H2), in function of the potential.
The data that come from experience allow thinking that the intersection of the right lines defines the protective potential and the associated current (Ip).

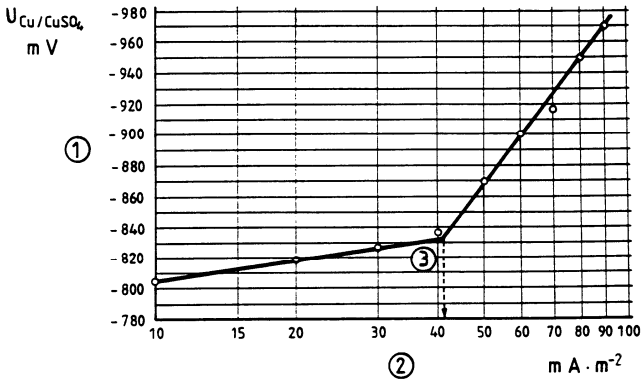

1) potential
2) current density
3) current required per m2

Fig- 1-2 Curve U(log I)

The current thus determined is more than the amount, which will be necessary after a certain polarisation time of the structure.
Indeed, the current amount decreases with the diminution of the oxygen at the phase boundary metal/electrolyte and with the formation of a protective layer at the metallic surface.

1.4 Comments

The fundamental criterion (E < -850 mV, or E < -950 mV in anaerobic conditions), measurements against the Cu/CuSO4 saturated electrode, is univocal.
Its application guarantees cathodic protection against corrosion lasting and reliable.
The criteria based on the potential variation (polarisation or depolarisation), or on polarisation curves (E= f(log I), are experimental criteria whose use is quite critical.

II – POTENTIAL MEASUREMENTS ON PIPELINES

The cathodic protection of buried structures is obtained by lowering the pipe to soil potential to a figure at least equal to or more negative than the figure of threshold of protection (fundamental criterion). In order to be fully effective it must be verified, through appropriate measurement techniques, that such a figure of threshold has been reached in all the points where the metallic surface is in contact with the electrolyte.
The potential measurement of cathodically protected pipelines is therefore of particular importance.

2.1 Theoretical bases of pipe-to-soil potential measurements

The threshold protective potential should be measured at the metal/electrolyte interface. In the laboratory, the reference electrodes are positioned the nearest possible to the coupon under study. Sometimes the electrodes are provided with a capillary probe, named Haber-Luggin capillary, that even when approached the most possible near to the surface of the coupon, does not constitute an electrical shield towards it. That allows limiting, or in practice to eliminate, the ohmic drop in the electrolyte that would distort the results of the measurement (Fig. 2-1).
In the normal practice, in order to measure the potential of buried pipelines, the reference electrode is usually placed at the soil surface, perpendicularly above the pipeline.

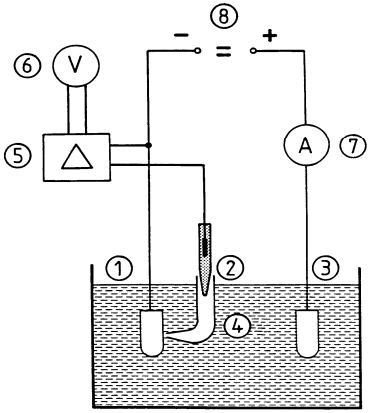

1- cathode
2- reference electrode
3- anode
4- Haber-Luggin capillary
5- measurement amplifier
6- voltmeter
7- ammeter
8- D.C. current feeder

Fig. 2-1 Laboratory potential measurement without IR drop

The figure measured these conditions (Uon)* it is the sum of the polarisation potential Up of the metallic surface corresponding to a coating fault, and an ohmic drop (IR) produced by the protective current between the defect and the reference electrode [(2)].

[(2)] Note
The potential with CP current (Uon) is the potential of a structure when the cathodic protection system is switched on and the output current is Ip. It is sometimes called: potential with current, UI, $U_{service}$.
Vice versa, the potential without CP current, (Uoff) is the potential of a structure soon after the cathodic protection current has been disconnected (Ip = 0).

Such IR drop depends on the resistance of soil RT between the defect and the electrode, and from the resistance RF between the metal and the electrolyte.

This IR drop can be divided into a horizontal measurable part UH, and a vertical part, which cannot be measured UV (Fig. 2-2). The figure of the horizontal IR drop varies with the position of the reference electrode from the defect, while the vertical component depends on the pipe depth.

The potential measured with CP current is given by the formula:

$$U_{on} = U_P + I\,(R_A + R_F) = U_p + RI \quad (2.1)$$

$$R = R_T + R_F \quad \text{where} \quad R_T = \rho/2d \;;\; R_F = \rho * l / F$$

Where ρ is the soil resistivity and F is the area of the metal contacting the electrolyte.

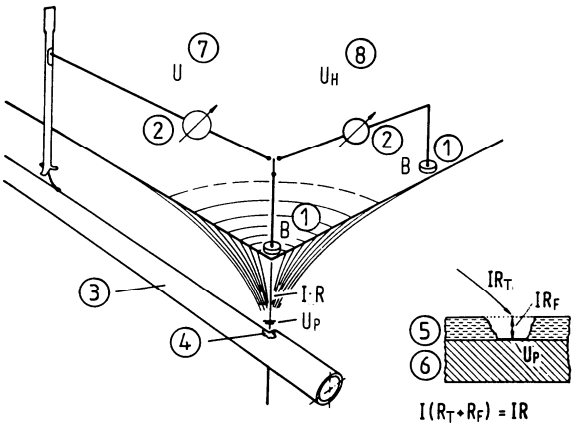

1- reference electrode
2- amplifier of measurements
3- pipeline
4- coating fault
5- coating
6- thickness of the pipe
7- potential (measured with current ON/ OFF)
8- gradient (measured with current ON/ OFF)

Fig. 2-2 Measurements of the potential and of the gradient of potential

It should be noted that sometimes the potential measured with CP current is more negative than the threshold protection figure, while in reality the polarisation potential Up cannot be attained.

The potential with CP current therefore does not give a reliable indication of the effectiveness of the cathodic protection.
As an example, Fig. 2-3 shows that, for a pipe with two coating defects having equal dimensions, the defect that contacts the soil with low resistivity is protected, while the one situated in a zone where the soil has an elevated resistivity is not protected. Fig. 2-4 shows the maximum dimension of the defect that can be protected for different potential measured with CP current ON, according to soil resistivity and with a current protecting density of 300 mA/ m2.
In order to know the real potential, the difference between the time responses of the electrochemical depolarisation and the one for disappearing the IR drop in the ground after the interruption of the current can be used.

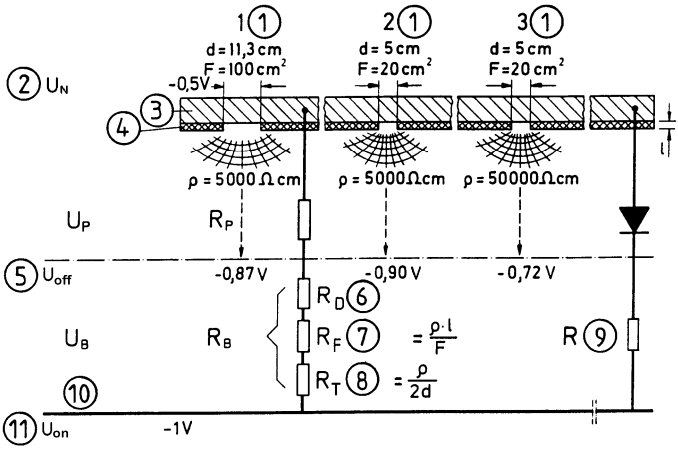

1- coating fault
2- natural potential
3- thickness of the pipeline
4- coating
5- potential without CP current
6- resistance of the polarisation film
7- resistance of the defect
8- resistance of the ground
9- resistance of the anodes
10- soil
11- potential with CP current

Fig. 2-3 Resistances: potential and IR drop in correspondence of the defects

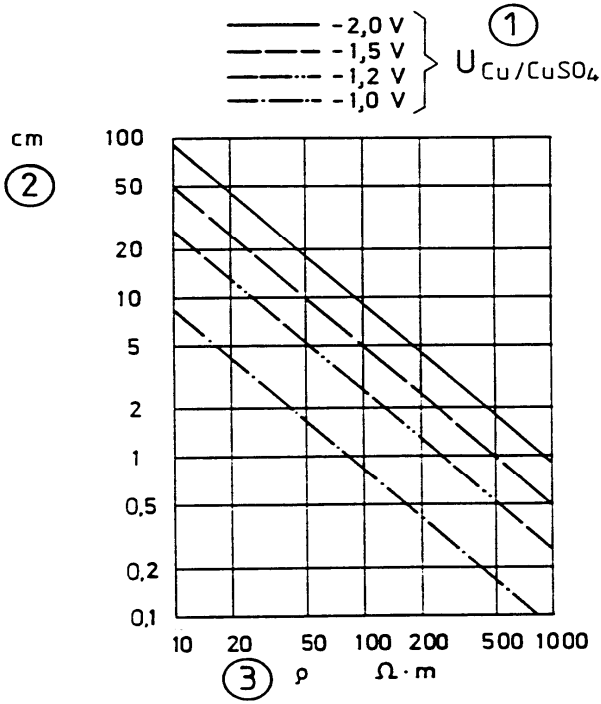

1- potential with CP current measrured at the surface of the ground
2- diameter of the defect in cm
3- soil resistivity in Ohm.m

Fig. 2-4 Relationship between the dimensions of a coating fault, soil resistivity and the potential measured at the ground surface, for a real potential measurements without IR drop of- 0.85 V (Cu/ CuSO4)

In the cathodic zone, the impedance at the interface metal / ground could be approximate to a resistance and a capacitance in parallel. The voltage behaviour after the interruption of the protective current, is given by the following formula:

$$U(t) = Up \cdot e^{-t/\tau p} + Ub \cdot e^{-t/\tau p} \qquad (2.2)$$

The constant of time of polarisation **τp** is approximately determined by the product of the CD capacitance of the double layer and the polarisation resistance **rp**.

For CD that goes from 10 to 100 microFarad/cm2 and **rp** = **ΔU/Δτ** that goes from 1 to 1000 Ohm.cm2, **τp** is included between 10^{-5} to 10^{-1} seconds.

$$10^{-5}\ s < \tau p < 10^{-1}\ s \qquad (2.3)$$

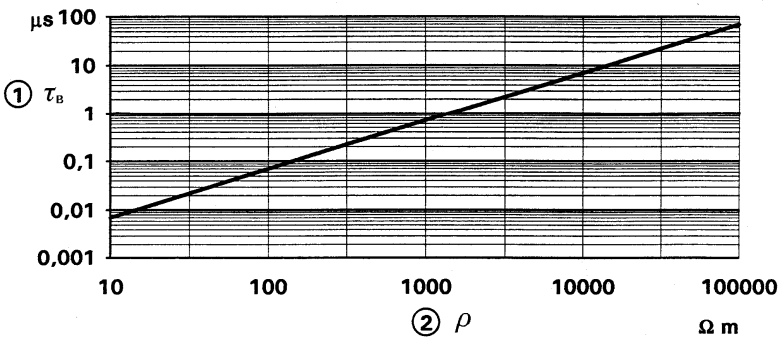

1) time constant
2) soil resistivity

Fig. 2-5: Constant of time of the IR drop in the ground, according to soil resistivity

In practice, the time constant is greater than the calculated figure, due to diffusion effects and to the formation of a protective film.

The constant of time **τb** , relevant to IR drop in the soil Ub can be calculated in relation to the soil resistivity and taking into account the figures of the dielectric relative constant,
ε r = 80, equal to the one of water solutions and of the dielectric constant of the void :
ε o = 8.85x10- 14 A. s. V- 1 cm- 1.

The Fig. 2.5 gives a graphic representation of it. Notice that the figure **τb** in ordinary soils is well below to 10- 6 seconds.

In these conditions, immediately after the interruption of current, at the t time = 0 we have therefore:

formula

The formula 2-2 becomes:

U (0+)= U off = Up (2.4)

When CP current is interrupted, the IR drop immediately disappears, while the depolarisation of the metal in the ground happens in a relatively slow way. In sandy soils having very high resistivity, and in presence of a high density of protecting current, the electric polarisation of the grains of sand can be present. In this case the measurements of the potential at the moment of the interruption of the current cannot be obtained if the electrochemical depolarisation of the metal happens more quickly of the re-orientation of the grains of sand.

The potential measurement without the IR drop is therefore generally possible immediately after the interruption of the current, if all the surfaces of the metal at the various coating defects are equally polarised (same potential of polarisation). The exactness of the measured figures depends on the time response of the measuring tool. The tools that have a time response lower than one second will give sufficiently precise result (Fig. 2-6). The error of measurements brings to reading more positive figures, as the real potential is in effect more negative than the measured one.

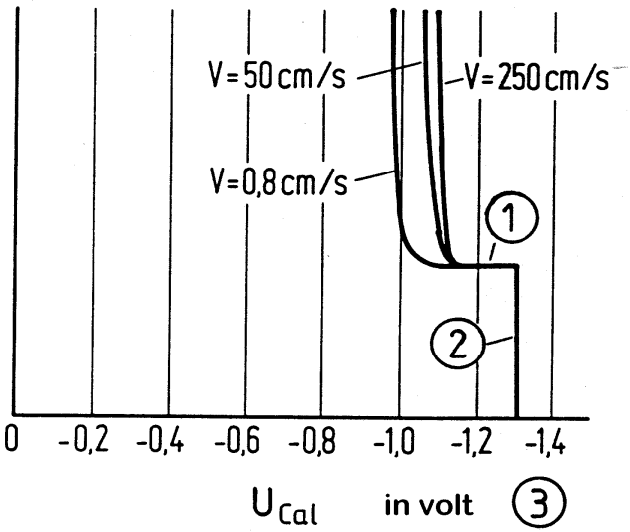

v = paper speed

1) Off potential measurement
2) On potential measurement
3) potential

2-6: Potential behaviour at the moment of the interruption of the current
Recording performed with different paper speed

2.2. IR drop due to the compensation currents

Because soil resistivity varies from place to place and being the defects of the coating of different dimensions, also the current density is different in correspondence of each of these. The defects therefore don't have the same level of polarisation. In presence of numerous defects, the pipe to soil potential measured at the ground surface is a mixed potential due to the different polarisation of each of these defects. For simplifying, suppose the presence of two defects, 1 and 2, polarised in a different way with a total current IS (Fig. 2-7). On these defects this correspond to the potential of polarisation Up1 and Up2 and the resistances in the ground RA1 and RA2.
With this hypothesis, the potential with CP current corresponds to the following formula:

$$U_{on} = I_S \cdot \frac{R_{A1} \cdot R_{A2}}{R_{A1} + R_{A2}} + \frac{U_{P1} R_{A2} + U_{P2} R_{A1}}{R_{A1} + R_{A2}}$$

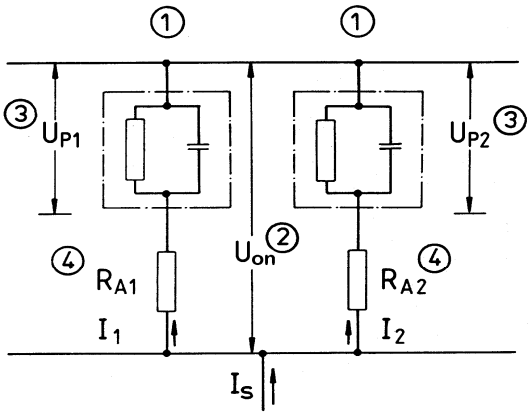

1) coating fault
2) potential with CP current Uon
3) polarisation potential Up
4) resistance towards earth of the defect

2-7: Electrical representation of two defects of the coating

The first term of this equation corresponds to the IR drop in the region of measurements of the pipe to soil potential (part IR). In case of interruption of the protective current (IS = 0) this first term disappears. The second term corresponds to the potential measurements after the interruption of current (Uoff). The figure measured represents the resultant potential of these two faults.

Since the potential of polarisation Up1 and Up2 are not equal, at the moment of the interruption a compensation current IA takes place,

$$I_A = \frac{U_{P1} - U_{P2}}{R_{A1} + R_{A2}} \quad \text{or} \quad I_A = \frac{\Delta U_P}{R_{A1} + R_{A2}} \qquad \text{2-6 and 2-7}$$

this causes , through the soil resistance of fault 1, an IR drop U*p1

$$U^*_{P1} = \frac{R_{A1}}{R_{A1} + R_{A2}} \cdot \Delta U_P \qquad (2\text{-}8)$$

The real polarisation potential Up1, at the defect 1 is in this case:

$$U_{P1} = U_{off} - U^*_{P1} \qquad (2\text{-}9a)$$

$$U_{P1} = U_{off} - \frac{R_{A1}}{R_{A1} + R_{A2}} \cdot \Delta U_P \qquad (2\text{-}9b)$$

In case of identical polarisation of the defects, ΔUp = 0 ; then Uoff = U*p1

From the formula 2-8 one can notice that the figure detected at the soil surface in correspondence of the less polarised fault is more negative than the real figure. Vice versa, the one measured over the fault that is more polarised is more positive than the real figure.

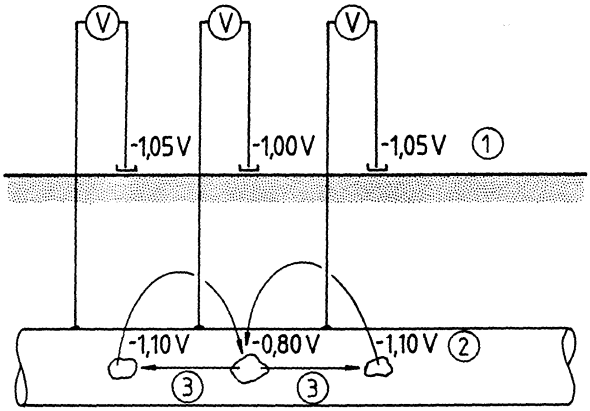

1- measurements potential without CP current
2- potential without IR drop in the ground
3- current of compensation

Fig. 2-8: Current of compensation and potential of the defects for a short interruption of the current of protection

The errors introduced by the current of compensation are not therefore identifiable if we rely only on the measurements of potential at the surface of the ground.
An indication of the presence of IR drop due to compensation currents, that can distort the result of the measurements, can be given by the measurement of IR drops (that is potential gradients) performed at the soil surface, in correspondence of coating faults, by using two reference electrodes. For this scope, one of the reference electrodes is placed above the pipeline and the other one is disposed perpendicularly to the pipe, for example at a distance of 10 m from the first one (Fig. 2-2). The IR drop so measured is indicated by ΔUt.

The polarisation potential of a defect Up can be calculated with the following equations:

$$\frac{\Delta U_{on}^{\perp}}{\Delta U_{off}^{\perp}} = \frac{U_{on} - U_P}{U_{off} - U_P} \qquad \text{2-10a}$$

from which:

$$U_P = U_{off} - \frac{\Delta U_{off}^{\perp}}{\Delta U_{on}^{\perp} - \Delta U_{off}^{\perp}} \cdot (U_{on} - U_{off}) \qquad \text{2-10b}$$

this allows concluding:

- If ΔUon and ΔUoff have the same sign:
  Up is more positive than Uoff. This error is unfavourable in the control of the
  cathodic protection since the pipe to soil potential, already relatively positive,
  could be really still more positive than the figure measured without CP current.

- If ΔUon and ΔUoff have an opposite sign:
  Up is more negative than Uoff. In this case, due to this error the results are more
  cautious.

- If ΔUon and ΔUoff equals 0:
  then Up = Uoff. The measurements potential without CP current corresponds to the
  polarisation potential.

In order to avoid the introduction of errors in the measurements, one must make sure that the electrodes of reference have the same potential, or, if it is not so, their difference must be taken into account when performing the calculation of the polarisation potential when using the equations 2-10a and 2-10b.

The figure 2-9 represents the course along a pipeline of Uon, Uoff, ΔUton, ΔUtoff and Up, determined by means of a calculation.

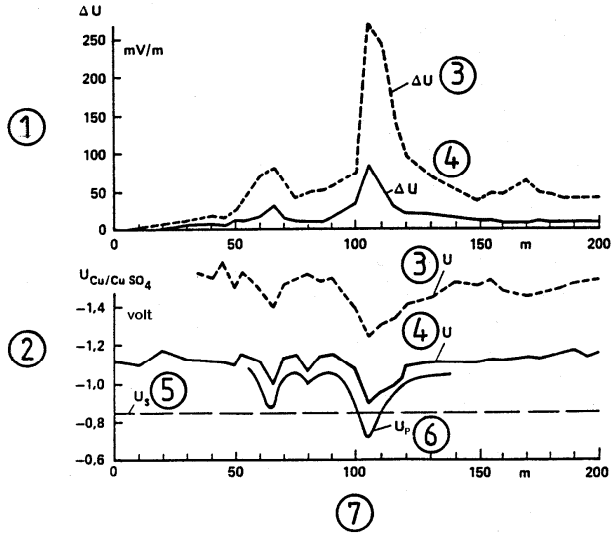

1) potential gradient
2) potential
3) CP current ON
4) CP current OFF
5) Criterion of the protective potential (U Cu/ CuSO4 =- 0.85 V)
6) potential without IR drop in the ground
7) reference km along the pipeline

Fig. 2-9: Determination of the Up potential without IR drop in the ground with the technique of the intensive measurements

In the areas of the pipeline where the coating is integer, that is outside the zone of the cone of voltage associated with a coating defects, the IR drops resulting from the protective current are too small to be calculated. Therefore the polarisation potential cannot be calculated through the equation 2-10b.
Because of the IR drop, the measurement of pipe to soil potential obtained with the ON/OFF method can be affected be great errors (see following paragraphs 2.3 and 2.4.).
On the other side, the potential measurements without CP current gives, compared to the ON potential, information a great deal more precise on the level of polarisation of the protected structure.
These errors of evaluation must be taken into ccount, especially when the measurements figures are near to the figure of threshold of protection,

and the potential Uoff in the upstream and downstream sectoins are more negative.
The pipe to soil potential without IR drop can be calculated by means of the equation 2-10b only if Uon and Uoff measurements have been made after the localisation of the defects ([7]).
For the determination of the potential of polarisation, necessary for evaluating the effectiveness of the cathodic protection, it is necessary to perform measurements at closer intervals.
Such potentials are measurements with CP current ON and OFF, while the voltage gradients ΔVon and ΔVoff are measurements between the first electrode positioned on the vertical of the pipeline and a second electrode placed at a distance of at least 10 metres from the pipe. Such measurements are performed at about 5 metres interval along the pipeline route.

([7]) *In case of pipelines with very poor coating (many faults, general porosity), the fault location is not necessary in advance. Such a situation occurs mainly in case of bituminous or coal tar coatings*.

2.3 Measurements of the potential in presence of stray currents of industrial origin

Stray currents are those circulating through ionically conductive means like ground and water.
They could be:

- constant current during time due, for example, to cathodic protection plants, or
  geological cells between steel in the ground and steel in the concrete.

- current varying both in intensity and direction, fluctuating during time, like those
  deriving from traction systems fed by DC current or telluric currents ([8]).

([8]) *CP stations working in variable current mode must also be considered as sources of variable stray current*.

2.3.1 Generalities

The evaluation of variable stray current must be done by recording for a fairly long time to be meaningful. The recordings of voltage and current will be performed in a period of time that is representative of all the electric status of the source of the stray current, that is for any cycle of traction (one hour for tramways and 24 or 48 hours for lines of electric railway traction). These measurements will allow to locate the areas were the effect of stray currents is maximum.
A pipeline is considered subject to stray currents when the recording of the potential presents variations greater than 100 mV; these cannot be disregarded. For pipelines without coating, this figure can be further reduced.

2.3.2. Methods of measurements

Currently, different measuring methods are used: the choice is made according to technical considerations (degree of precision which is required) and economical considerations. Here below the description of the characteristics of each of these methods is indicated.

2.3.2.1. Measurements of the potential of pipelines cathodically not protected

This type of measurements is performed by simply connecting the tool recorder, through isolated cables having an area not less than 1 mm2, to the pipeline and to a reference electrode set as near as possible to the structure.

2.3.2.2. Measurements of the potential of pipelines protected cathodically

a) method with CP current ON

The same methodology is used to the one previously described.
To measure the potential, the cable connection to the pipeline should not be carrying current, and then a dedicated cable should be used.
In case of long cable connected to the pipe and carrying high currents (for example a cable connected to a cathodic protection station or to a forced drainage), it’s needed to make a correction of the figure that has been read, taking into account for the IR drop on the same cable.
This method is of simple realisation.
The measurements of the potential could however be wrong, because of the voltage drop in the ground due to the CP current and to stray

currents. Sometimes it is wise to apply other methods that allow the elimination of this voltage drops (IR), especially when stray currents influence the structures or when the electrolytic environment has an elevated resistance.

b) method without CP current

This method does not allow the determination of the real potential (that is without IR drop) in the presence of stray currents, as it is not possible to interrupt, during the potential measurements, the current deriving from the perturbing installations.
Nevertheless, if there are periods during which the operation of the installation is stopped, (this can happen for at least one hour during the night), the following measuring method could be adopted:

In each test point, which is considered critical, within the zone where stray currents are present, the following measurements are to be done:

1) Recording for at least 24 hours of the potential of the pipeline (Uon). In this period the cathodic protection system is operating. On the records, the periods of time during which the influence of stray current is maximum (during the day), and absent or reduced (during some hours in the night) must be noted.

2) During the period of absence of stray current, the potential of the pipeline is recorded (Uon (night) and Uoff (night)) by means of a device for cyclical interruption of CP current on the section interested by the measurements.

If the figures given by these two recordings satisfy the following conditions:

- The potential Uoff (night) is more negative than the potential of protection (850 or- 950 mV (Cu/ $CuSO_4$).

- The potential Uon(day) recorded during the whole day must be more negative of Uon (night) (figure with CP current ON),

then we can say that a protective status has been achieved, even in the most critical test points.
The figure ΔU = Uon (night)- Uoff (night) represents the IR drop in the ground due to the CP current in absence of stray current.
When evaluating the potential Uon(night), the current of compensation (or equalisation) must be taken into account that, with this methodology, cannot be eliminated (see par. 2).

2.3.3. Potential measurements without ohmic IR drop in the soil in the presence of an extraneous voltage cone (linear part)

The measurements of the real potential could be distorted by IR drop due to an increasing of external voltage, such as galvanic coupling as steel-soil/steel-concrete or from stray current deriving from railways lines fed with DC or from telluric current. While ohmic drops deriving from galvanic steel-soil couples/ steel-concrete is constant, those due to current stray varies their intensity and direction in the ground during operation.
To determine the real potential of the structure the elimination of the IR drop due to these currents is necessary.
The measurement of potential without CP current doesn't allow of eliminate IR drops due to stray currents because it isn't generally possible to interrupt the source of stray current at the same time.
The protection devices are often situated near to the electric substations where the potential of the pipeline has the tendency to become more positive when the rails become negative. When the current of protection is interrupted for the application of the method of measurements of the potential without CP current, the pipe to soil potential becomes more positive than the one measured when CP current is circulating.
The measurements without CP current don't give therefore, in this case, the real potential of the pipeline in protection.
If the interruption of CP current is obtained by switching off the electricity in the grid in alternating current, stray currents will still be drained from the diodes of the bridge and will determine further IR drops in the ground that prevent a correct determination of the real potential (see the recordings described at point 6 of the figure 2-10).
The interruption of the protective current will then only be possible by opening the secondary circuit of the transformer/rectifier (connected to the structure and ground bed).
Since stray currents involve huge risks for the pipelines and since the method of measurements without CP current is not adequate, it's important in these cases to use other methods that allow to measure the real potential of the pipeline.

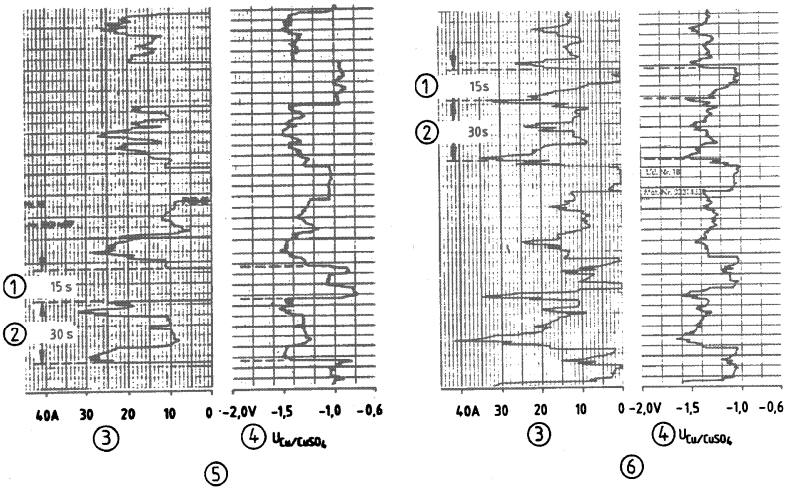

1) CP current ON
2) CP current OFF
3) current of protection
4) potential (V)
5) switching ON/OFF of CP current
6) switching ON/OFF of the alternating current feeding the transformer/rectifier

Fig. 2-10 recorded Potential nearby a drainage in presence of stray currents

2.3.3.1. Measurements of the potential without IR drop in the soil in the presence of a cone of extraneous voltage (linear part)

Since only a part of the stray current dispersed by extraneous installations is absorbed by the pipeline through the defects of the coating, only this will be considered in the calculation of the potential without IR drop. An arrangement for the devices like the one represented in Fig. 2-11 allows to eliminate from the measurements the IR drops due to currents other than the one that goes towards the structure to be protected.

$$\Delta U_V = K(\Delta U_{1on}^{\perp} + \Delta U_{2on}^{\perp}) \qquad (2\text{-}11a)$$

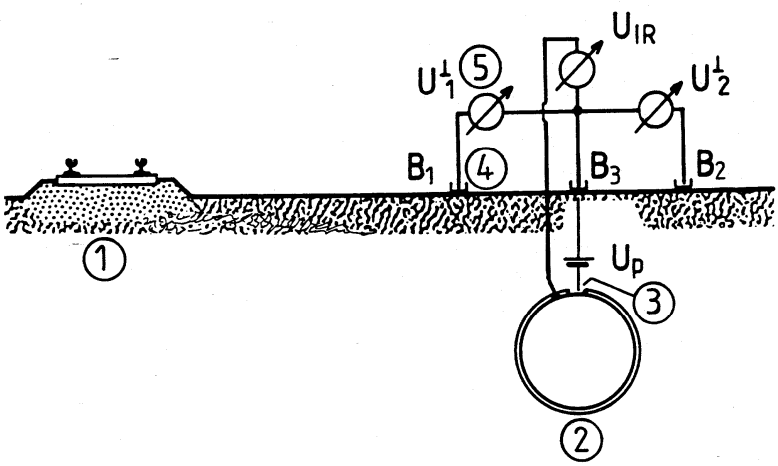

1) rail
2) pipeline
3) coating fault
4) reference electrode
5) measurement amplifier

Fig. 2-11 Schematic representation of the disposition of reference electrodes above a pipeline influenced by stray currents for determining the pipe to soil potential, without IR drop.

The figures of the horizontal components of the IR drop on the soil surface are indicated as U(1on) (measurements between electrodes B1 and B2) and U(2on) (measurements between B2 and B3). The electrode B3 is placed on the vertical of a coating fault localised on the pipeline, the electrodes B1 and B2 are placed at equal distances from B3, perpendicularly to the pipeline axis.
The sum of these horizontal components is proportional to the vertical component ΔU_v, between B3 and the coating fault : the electric field gradients due to stray currents vary linearly with the intensity such currents:

$$\Delta U_v = k\,(\Delta U_{1on} + \Delta U_{2on}) \qquad (2\text{-}11a)$$

The relationship between the potential U_{on} of a defect, measured with CP current, being U_p his potential without IR drop, and the voltage gradients on the surface of the soil $\Delta U1_{1on}$ and ΔU_{2on} ,

is given by the following relationships:

$$U_{on} = U_p + U_v \qquad (2\text{-}11b) = (2\text{-}1a)$$

$$U_{on} = U_p + k\,(\Delta U_{1on} + \Delta U_{2on}) \qquad (2\text{-}11c)$$

In this equation ***k*** is a constant, function of the resistance of the ground existing between the reference electrodes and the pipeline under protection. For the proportionality of the ohmic components, if the formula:

$(\Delta U_{1on} + \Delta U_{2on}) = 0$, the vertical component of the IR drop is also equal to zero.

When switching off the CP current, the measured potential is given by the equation:

$$U_{off} = U_p + k\,(\Delta U_{1off} + \Delta U_{2off}) \qquad (2\text{-}12)$$

The solution of the equations 2.11c and 2.12, with the elimination of the term ***k***, allows the determination of the potential U_p without IR drop.

$$U_p = \frac{(\Delta U_{1off} + \Delta U_{2off})}{(\Delta U_{1on} + \Delta U_{2on}) - (\Delta U_{1off} + \Delta U_{2off})} \times (U_{on} - U_{off}) \qquad (2.13)$$

The equation 2.13 allows therefore to calculate a potential without the IR drop, by using the figures measured without CP current, even in presence of voltage drops due to stray current and compensation currents. This method of determination of the potential without IR drop is named **"interpolation method" ***.

****** *Note: in the German speaking countries this method is named "extrapolation method"*

b) limitations of the interpolation method nearby stray current sources

In order to apply the formula 2.13, when the pipeline and the rails have a parallel run and are quite near, the evolution of the voltage cone must be taken into account.
The results of the measurements of the effect of the voltage cone on different rail of tramways are shown in Fig. 2-12. The dispersion in the measurement figures is due to the different isolation conditions of the rails towards the ground.
It's possible to verify, in each case, a rapid drop voltage starting from the rail ballast to the immediate vicinity (non-linear part of the curve). From a distance (L) of around 3 meters from the rail, the voltage cone of the rails assumes a quasi-linear behaviour and doesn't suffer any significant modification.
We are therefore able to presume that starting from this distance the current gives rise to an IR drop in the ground practically constant for unity of length (being in the linear part of the voltage cone).
This distance (L) and the voltage drops due to stray currents that are not absorbed by coating faults could be resolved by placing the electrodes B1 and B2 at equal distance from B3.
The voltage drop will be therefore eliminated by adding the voltages $\Delta U_{1on/off} + \Delta U_{2on/off}$ measured between the couples of electrodes B1-B3 and B2–B3 (Fig. 2-11).

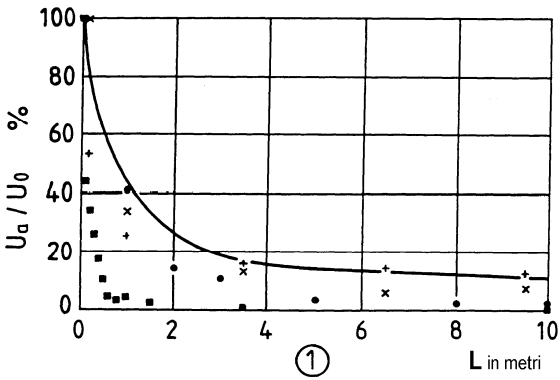

* for a new ballast
* for an old ballast
*+ for rails incorporated in the ballast 1) distance from the external edge of the rail

Fig. 2-12 Voltage cone determined by tramway rails

In absence of IR drop voltage varying during time because of stray currents, the measurements of the potential and of the necessary voltages for the solution of the equation 2.13 can also be performed on each of the points of measurements, one after the other.
In presence of varying voltage drops, it is necessary for each measurements to simultaneously reading the potential $\mathbf{U_{on}}$ with CP current and the two horizontal voltage drops $\mathbf{\Delta U_{1on}}$ and $\mathbf{\Delta U_{2on}}$, in order to take into account the proportionality of the horizontal and vertical components of the IR drops.
These simultaneous measurements can be performed at any time during the sequence of switching on/off of CP stations.
The measurement of the potential $\mathbf{U_{on}}$ and of voltage drops $\mathbf{\Delta U_{1off}}$ and $\mathbf{\Delta U_{2off}}$ without CP current must be performed simultaneously. For this last reading, it is important that the measurements are taken immediately after the interruption of the current (i.e. within one second) in order to minimise the errors due to the depolarisation.
It's therefore necessary to synchronise the tools of measurement and the timer that imposes CP current switching on/off.
A calculation made by an automatic data logger determines, starting from the measured figures, the potential of the defects without IR drop, according to the equation 2.13.
The reference electrodes B1 and B2 must be placed perpendicular and symmetrically from the axis of the pipeline at a distance of at least 3 meters from the pipe. For this reason, and also to be able to take into account of the cone of voltage caused by the rails, the method can only be employed if the distance from the pipe to the rail is of at least 6 metres.

c) verification of the method through a probe

This method has been experimented with the aid of a metallic probe electrically connected to the pipeline. The fig. 2-13 shows:

- the real probe to soil potential (without IR drop);
- the potential of the probe without IR drop with the reference electrode incorporated in the probe;
- the measured potential, without CP current through a reference electrode placed over the pipe, with CP station on and off

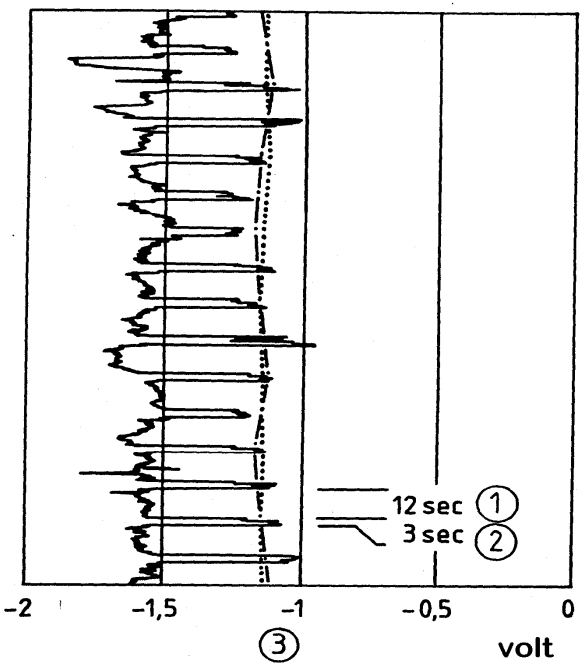

1) with CP station ON
2) with CP station OFF
3) potential referred to Cu/CuSO4 reference electrode
------ potential probe/ soil measured with a reference electrode placed over the soil surface
-.-.-.- potential probe/ soil measured with a reference electrode incorporated in the probe
. potential probe/ soil, determined according to the interpolation method

Fig. 2-13 Potential of a probe towards the soil, determined with different methods

It is possible to verifie that the real potentials of a probe calculated by the "extrapolation method" and the ones measured by using an electrode included in the probe are practically identical. The interpolation method is only usable if the distance between the pipeline and the rail is of at least 6 meters.

The determination of pipe to soil potential without IR drop in the ground requires that the reference electrode is placed in correspondence of a defect.
If in the spot where the measurement takes place the coating of the pipeline is integer we have:

$$\Delta U_{1on} + \Delta U_{2on} = 0$$

then:

$$\Delta U_{1off} + \Delta U_{2off} = 0$$

In this case, according to the equation (2.13), **Up** remains undetermined.

In order to face this eventuality, the device for calculation is programmed in a way that when the figures ΔU_{1on} are very small (in the order of some mV), the figure of the second term of the fraction described in the equation (2.13) is considered null.
The potential read corresponds, in this case, to the one measured without current U_{off}. This situation must be mentioned in the notes of the measurements.
Since the part of the pipe where the coating is intact is not submitted to polarisation, then it is not possible to measure the real potential **Up** (without voltage drop), but, after the interruption of CP current , only the potential U_{off} of the nearest coating defects. This figure represents the second term of the equation (2-13).
In the areas where the soil covering the pipeline is not too thick it is possible to leave out the terms U_{1on} and U_{2on} if they are small, because they represent small coating defects where cathodic protection is generally sufficient.
On the contrary, where the pipeline is very deep, big coating defect may produce at the soil surface small voltage drops. In these cases it is important to take into account these figures to determine through calculation the potential without ohmic drop.

2.3.3.2. Measurements of the potential without ohmic IR drop in the soil in the presence of an extraneous voltage cone (non-linear part).

The methods of measurements described at previous par. 2.3.3.1 cannot be applied when the structure to be measured is inside the non-linear of a cone of extraneous voltage. In this case a probe is used for estimating, by comparison, the structure to soil potential.

A plate of steel with one side perfectly isolated is connected to the pipe through a cable. This probe simulates a coating defect. An electrode set in proximity of the probe in correspondence of the side that is not isolated allows measuring the potential without the IR drop errors.

In the constructive (patented) scheme represented in Fig. 2-14, the electrode is inside a plastic tube filled with a saturated solution of sodium sulphate, to touch the ground through a porous plug.

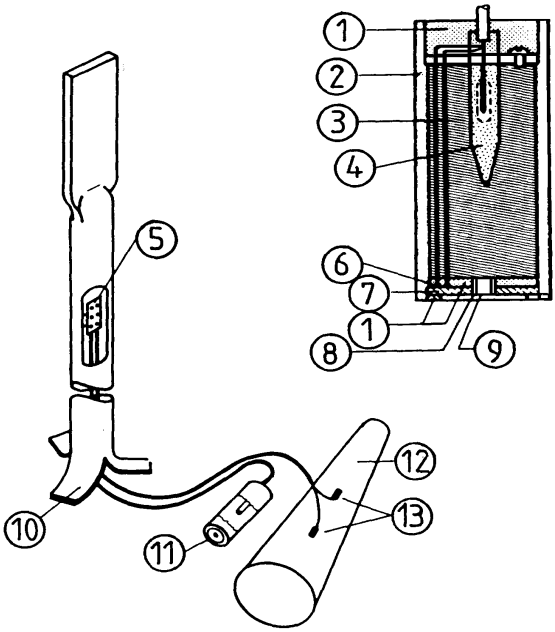

1) filling material
2) plastic tube
3) saturated solution of sodium sulphate
4) electrode of reference
5) test point

6) connection of the cables
7) steel probe having for example a surface of 30 cm^2
8) plastic tube
9) porous plug (diaphragm)
10) test point
11) measuring probe (patented system)
12) pipe
13) connection cables

Fig. 2-14 Disposition of a steel probe with an incorporated reference electrode

The potential measured by using a probe represents the potential of the metal of the pipe having a coating fault of equivalent surface.
The Fig. 2-15 represents the recordings of the potential of a measurement probe with a reference electrode incorporated (curve 3), of the potential measurements with an electrode set on the ground (curve 2) and the recording of absorbed current from the probe (curve 1). The potential, without IR drop, measured with the electrode incorporated is practically constant while the potential measured with the electrode set on the ground suffers the corresponding variations due to the fluctuation of the protective current. These modifications only are ohmic IR drops in the ground, and this does not imply variations of the polarisation of the probe; this can be explained by the different time constant of IR drop and polarisation (see paragraph 2.1).

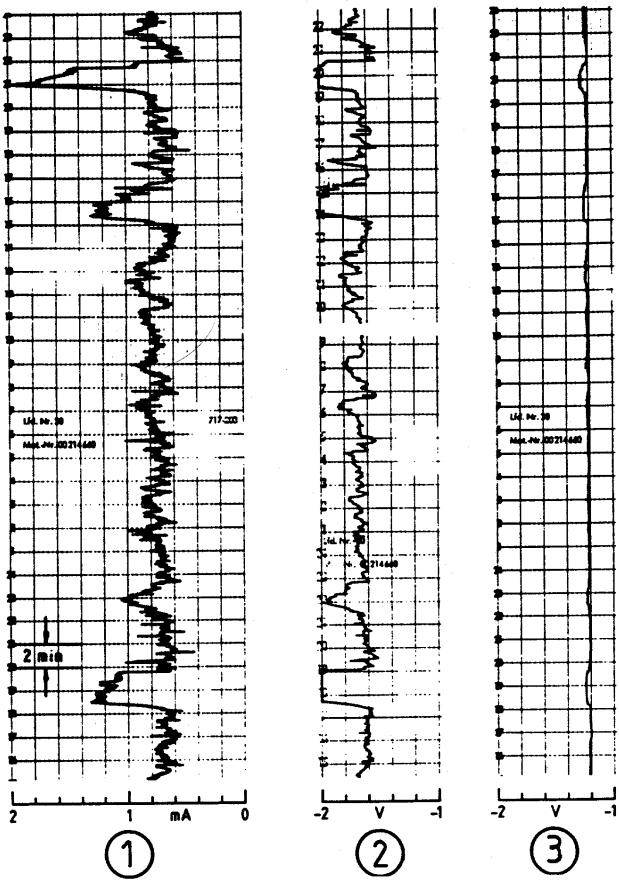

1) current of protection of the probe
2) potential measured with an electrode set on the surface of the ground
3) potential measured with an electrode of reference incorporated in the probe

Fig. 2-15 Recording on a probe connected to a pipe influenced from stray currents

The smaller the defect, the more negative the potential without IR drop becomes. Accordingly, being equal the resistivity and aeration of the ground, the potential of all the defects of coating faults smaller than the surface of the probe will be more negative than the potential of the probe.

On the contrary, the potential of defects larger than the surface of the probe will be more positive. The only knowledge of the potential of the probe is not therefore a sure criterion of the levels of polarisation of the whole structure. But, the potential measured with the probe presents a great interest for the control of the cathodic protection of structures, whether or not they are subject to the influence of stray currents from external sources.
Such devices are recommended, on a few places, on pipes whose coating has a high isolation figure, in the areas subject to gradient of elevated voltage, or when there are peculiarity of construction (very deep burial, crossings, electrical shield, intersections or parallelisms nearby with other structures).

2.4. Potential measurements without IR drop

2.4.1. Technique of intensive measurements

In order to practically determine the potential without voltage drop (IR) in the ground with the method of the intensive measurements it's necessary to previously seek the
defects by measuring the IR drop voltage in the soil ΔU_{on} and ΔU_{off} (par. 6.2).
In the positions where the coating faults have been found, U_{on} and U_{off} potential, are measured by switching on and off the circuit of protection at regular intervals (see also par. 2.1 and 2.2). If the compensation currents are also to be taken into account, it is necessary to measure simultaneously and in the same conditions, U_{on} and U_{off} potential and the IR drops ΔU_{on} and ΔU_{off}.

2.4.2. Periodical interruption of the current

If the cathodic protection of the pipe is realised with more than one CP stations, it is necessary to switch on and off all of them simultaneously. The duration of the switching off will always be 25% shorter than the time of switching on.
During the pipe to soil measurements of a structure the current of protection could be, for instance, periodically in service for 27 seconds and disconnected for 3 seconds.
For particularly important measurements, or for very long pipes, shorter intervals are often used (12 seconds on and 3 seconds off) in order to take into account that this kind of measurements could last some weeks.
With such figures of on/off, the current of protection to the pipe is reduced of around the 20%; then, after a few hours, the pipe to soil potential becomes less negative.

Some studies on this subject have shown that the diminution of the potential after one day may be between 50 and 100 mV. It is therefore recommended to use timing systems that stop the operation, leaving the CP stations in operation during the night and the weekends.
This disposition allows to give the pipe with the nominal protective current during the Off periods of the measurements.
The synchronisation of switching off of CP stations is assured by quartz timers or by devices that use radio-frequency emitters of hourly signals; they could be programmed to assure a permanent operation of the cathodic protection feeders of current during the night and in the weekend.

2.4.3. Coating fault location

The location of coating defects is based on the following principles:
The current of protection goes only toward the defects of the coating.
Due to the resistance metal to soil, such current gives rise to IR drops in the ground that could be measured on the surface between two reference electrodes.
The graphical representation of the measured figures presents the form of a cone which top corresponds to the geometric centre of the defect, that is the point where the pipe to soil potential should be measured.
The general methods for localising the defects of the coating are described at paragraph 6.2.

2.4.4. Practical measurements of the potential without IR voltage drop

Different method may be used to determine the real potential; hereafter the most important are described.
The methods require (as indicated at par. 2.3.3.1.c) the preventive localisation of the defects of the coating and consequent potential measurements only at the coating faults.
In order to detect all the important faults (contacts and grounding having a certain importance), it could be necessary, especially on pipelines provided with bituminous coatings having low isolation figures, to measure simultaneously the pipe to soil potential and IR drops at intervals of 5 m along the pipe. In some cases, in order to better localise the defects, it could be necessary to perform these measurements at smaller distances, reducing this distance up to 0.5 m.
This is the reason why this is also named “Close Interval Potential Survey - CIPS “.
The first method, firstly developed around the ‘70s for the measurement of potential without IR drop, is represented in Fig. 2.16.
A first operator locates the pipe with the help of a pipe locator and will find the position of each point of measure with the help of a metre. The

second operator measures the IR drops in the ground between the two reference electrodes B and B' to locate the coating faults. The third operator measures the potential of the pipe with the electrode B. Since the voltmeter must be electrically connected to the pipe, the third operator transports a cable spooler connected to the pipe in correspondence of a test point.
A fourth operator, responsible of the team, evaluates the measurements and drafts the results in a proper report.

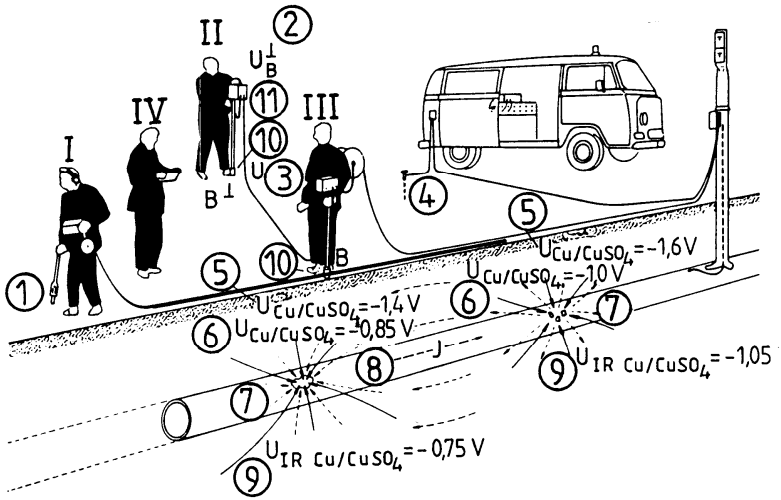

1) pipe locator
2) On/Off gradient of potential
3) potential with CP current on/off
4) stick earthing for pipe locator
5) On potential
6) Off potential
7) coating defect
8) current circulating in the pipeline
9) potential without IR drop in the ground
10) reference electrode
11) amplifier of measurements

----current of protection …... current of compensation

Fig. 2-16 Disposition of the operators and of the devices for the measurements of pipe to soil potential and of voltage gradients due to coating faults

This method has been simplified, thus avoiding a 2nd operator, by placing the second electrode to the neutral (or remote) earth [16] as evidenced in figure 2.17.
The neutral earth, in general, begins at a distance that ranges between 50 and 100 m perpendicularly to the pipe. [17]

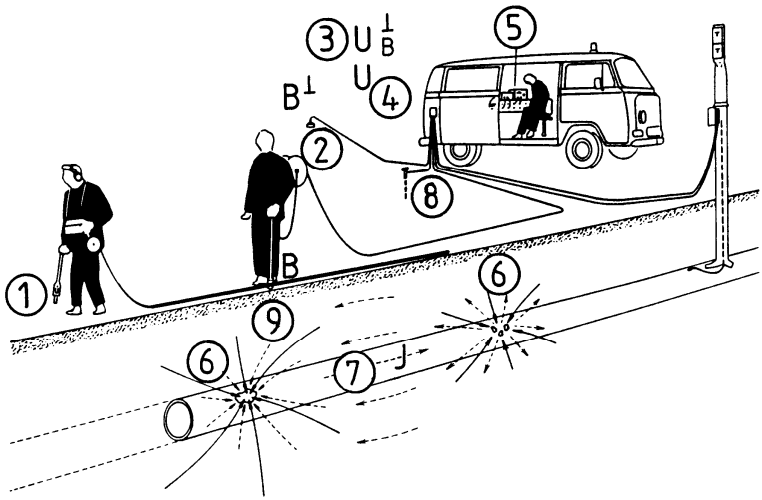

1) pipe locator
2) electrode of reference (to the remote earth)
3) gradient of potential with CP current ON/OFF
4) ON/OFF potential
4) amplifier of measurements
6) coating faults
7) current that runs along the pipe
8) earthing stake for pipe locator
9) reference electrode

----current of protection ….. current of compensation

Fig. 2-17 Disposition of the operators and of the devices to measurements Pipe to soil potential and the IR drops towards the remote (neutral) earth

Another method allows to avoid the transport of the connecting cables to the pipe and facilitates the measurements (along the pipeline route). The principle is described in Fig. 2-18. This is based on the following concepts: the figure of the pipe to soil ON potential, measured with CP

current, towards the reference electrode B1 placed in the ground above the pipe is composed of a voltage of polarisation Up at the ground/defect interface (without IR voltage drop) and of an IR drop given from the passage of the current of protection in the ground (see Fig.2-19).

(16) Neutral (or remote) earth: outside of the influence of anode or external sources
(16) The 2nd operator is not needed since the measurement of the gradient Ub is no longer necessary

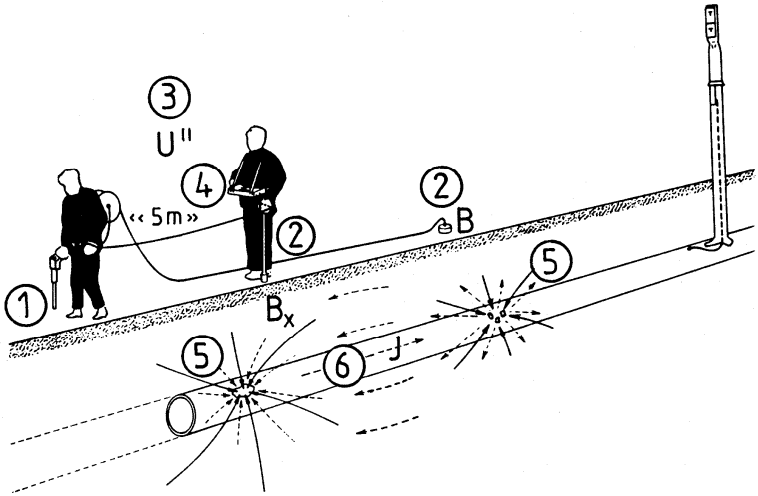

1) pipe locator
2) reference electrode
3) gradient of potential (soil B/ soil Bx)
4) computerised device for the measurements
5) coating faults
6) current that circulates in the pipe

----current of protection ….. current of compensation

Fig. 2-18 Disposition of the operators and of the equipment for the calculus of the potential pipe/ earth and of the cones of voltage with the method of the successive voltage gradients.

on = Up + (IR) 1 (2.14)

This ohmic drop $(IR)_1$ could be divided, in correspondence of the electrode of reference B1, in a horizontal component and a vertical component.
The potential measured with CP current in the point B2 where the electrode is placed vertically on a coating defect is:

$$U_{2on} = U_p + (IR)_2 \quad (2.15)$$

In the spot where the electrode B_2 is positioned, the voltage drop (IR) 2 contains only a vertical component. The potential measured through the two electrodes B_1 and B_2 is different only for the horizontal component of the voltage drop between these two points.
The U_B voltage measured between the electrodes of reference B_1 and B_2 are:

$$U_B = U_{1on} - U_{2on} \quad (2.16)$$

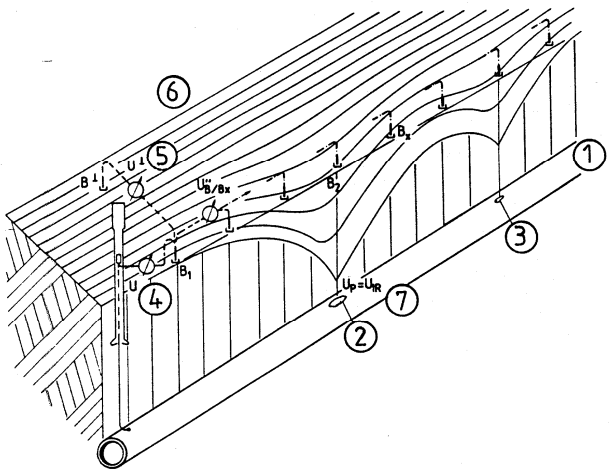

1) pipeline
2) big coating faults
3) small coating faults
4) ON/OFF potential without voltage drop in the ground
5) gradient of potential
6) neutral earth (distant or remote earth)
7) potential of polarisation (Up)= potential

Fig. 2-19 Formation of cones of voltage along a pipe having coating faults with different dimensions

The pipe to soil potential in the point where the electrode B2 is placed could be determined starting from the pipe to earth potential measured at the height of the electrode B1 and the IR drop between these two electrodes.

$$\mathbf{U_{on} = U_{1on} - U_b} \qquad 2.17$$

In this way, each potential figure can be determined starting by calculation from the measurement of the pipe to soil potential measured at a point B.
To this figure the gradients measured between the 2 electrodes placed subsequently above to the pipe on the surface of the ground should be added.
This is also valid for the measurements of potential performed with the current switched OFF.
Only after the advent of computerised devices that, allowing an elaboration of the data on the site, this method has become really effective. The measurements are detected and, after conversion, elaborated and memorised. The computer is used by the technician in an interactive way. At the end of a series of measurements the data have to be transferred to a mobile memory not erasable and sent by mail to the centre where they are inserted in a central unit for further elaboration. The whole of the operation in the field, the elaboration and production of relative documents doesn't require human intervention increasing the reliability and reducig the costs of the procedure (Fig. 2.20).

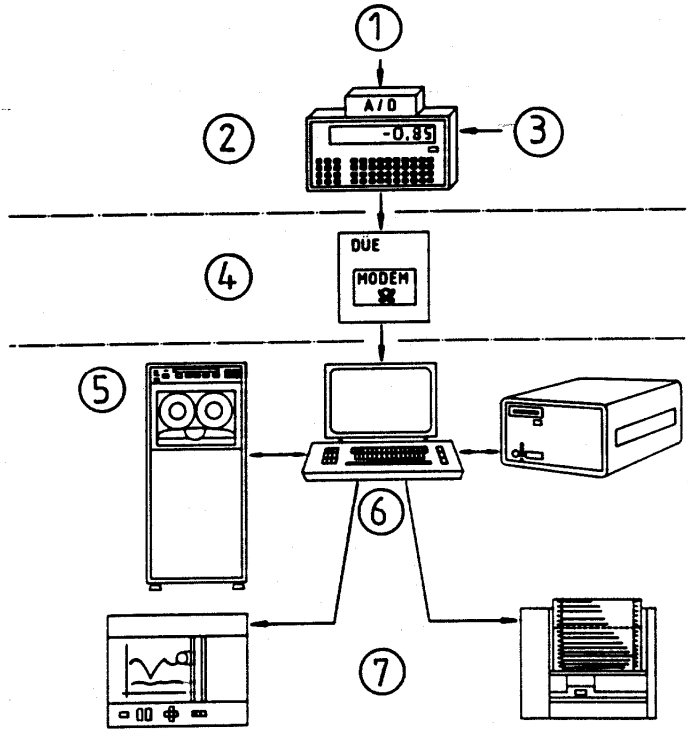

1) memorisation of measurements
2) measurements sorts along the line
3) program: measurements of verification/ intensive measurements
4) transmission data
5) evaluation, memorisation
6) terminal/central unit
7) exit data

Fig. 2-20 Schematic representation of mobile devices for the field and the treatment of the relative data for the intensive measurements

2.5 Reference electrodes and tools for the measurement of the potential

2.5.1 Reference electrodes

A reference electrode must be non-polarisable and reversing, besides, it must deliver reproducible results. The reference electrodes are half-cells in which the electrode is made of a metal in an electrolytic solution having a known concentration of its metallic ions. The double layer formed between the metal of the electrode and the solution determines a constant difference of potential, called “electrode potential”.

The electrolytic solution of the reference electrode contacts the ground in which the pipe is buried, through a membrane or a porous plug. The ions of the solution spread through the membrane or the porous plug.

Therefore, a potential of contact is established, which systematically falses the results of the measurements. To compare the measurements it is necessary that the potential of membrane is always as small as possible. As a matter of principle, they don't exceed 50 mV, and they could be further lowered by moistening the ground around the electrode.

The most used electrode of reference for the measurements of the potential of buried structures is the copper/ copper sulphate saturated electrode. It is strong, easy build, and it gives satisfactory results. Its potential towards the hydrogen electrode is equal to + 0.32 V in standard conditions (23°C+ 0.1 and to the pressure of 1 bar). It can be sligthly influenced by the chemical impurities and from variations of the concentration of the electrolyte. But its precision cannot be compared to those used in the laboratory.

The measurements in the laboratory are very often performed with a calomel saturated electrode, which potential is +0.24 V towards the hydrogen standard electrode.

In presence of chlorides (sea water) the Ag/AgCl electrode is often used, which potential as regards the normal hydrogen electrode is +0.2V.

Electrodes of reference of the same type could differ from each other sometimes up to 10- 20 mV. These differences are of the same size as the errors of reading of the tools used for the measurements. If these differences are very small, they can be neglected. If they overcome the quoted figures, a revision of the electrodes is needed.

The inner resistance of the reference electrodes can vary, according to the type, between 100 to 1000 ohm. This resistance must be added to the contact resistance towards ground, that it is function of its resistivity. For example, in a ground having a resistivity equal to 50 Ω m and with an electrode of 0.1 m diameter, the resistance between the electrode and the ground is:

$$R = \frac{Ro}{2d} = \frac{50}{0.2} = 250 \text{ Ohm} \qquad (2.18)$$

In general, in order to lower the resistance between the electrode and the ground, copper/copper sulphate electrode having large surface should be used (their diameter can be up to 10 cm). Electrodes having a smaller membrane are used for their higher mechanical resistance. If the ground is asphalted or paved, other types of copper/copper sulphate could be used (for instance the point type electrodes).

2.5.2 Devices for potential measurements

The potential is measured by means of electronic voltmeter-amplifiers having a high internal resistance. They have an input impedance ranging between 1 and 100 Mohm, perfectly sufficient to give a precise measurement in soils having very high resistivity, also when electrodes of reference provided with a small diameter membrane are used. In any case, the inside resistance of the tool of measurement must be at least 100 times higher than the total resistance between the electrode and the pipeline.

In order to assure a sufficiently precise reading, the voltmeters must have different scales of measurement ranging between 1 and 10 V. Sometimes it could proper to use voltmeter-amplifiers having high internal resistance that are able to measure even voltages in the order of the microvolts. These can be used to measure IR Drops along the pipe, used as a shunt, to determine the intensity of current that circulates between two points on the pipe. They must be equipped with reliable filter for alternating voltages, so that the continuous current measurement is without errors.

Since the resistance of the electrodes of reference used for the grounds is generally lower than 1 Kohm, multimetres could also be used having an internal impedance in the range of 100 Kohm per volt.

The study of the cathodic protection in stray current areas implicates the simultaneous measurements of different parameters (current of drainage and of protection, potential of the pipe and of the rails).

The instrumentation to be used for such measurements, according to the entity and of the gravity of the electrical problems, could consists of:

to) analog recorders having a paper speed between 30 and 600 mm/ h, according to the phenomena to examine, with time response lower than 1

second. The voltage recorders must have an internal resistance higher than 10^6 ohm.

b) numerical integrators that record measurements according to a program and classify the figures of potential or current in pre-set fields. They deliver, through a printer and in form of histogram, the cumulated percentage duration of measurements that lay in a certain interval of potential or current, as shown in Fig. 2-21.

c) acquisition devices connected to computerised devices, that assure the calculations required.

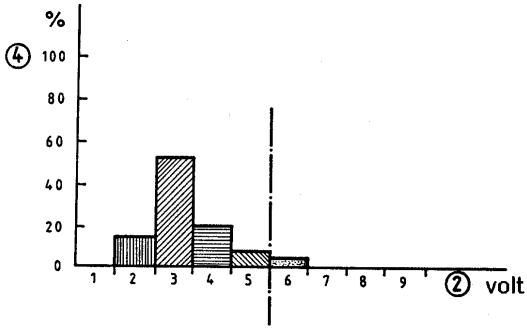

1		
2	3 volt	4 %
1	-0,50 — -4,0	0
2	-4,0 — -2,5	15
3	-2,5 — -1,5	52
4	-1,5 — -1,0	20
5	-1,0 — -0,85	8
6	-0,85 — -0,60	5
7	-0,60 — 0,0	0
8	0,0 — +3,0	0
9	+3,0 — +50	0
		100

5

6

1) definition of the range of figures
2) numeration of the range of potential
3) range of the potential
4) percentage part of the total time of recording, correspondent to the duration of each range of figures

5) protected pipeline
6) pipeline not protected

Fig. 2-21 Histogram of the potential

2.5.3 Measurement tools used in presence of alternate voltages

According to the type of tools used, the results of the measurements taken with tools in d.c. may be more or less influenced by the presence of superimposed alternating current. The sensitivity to these troubles depends on the nature of the system of measurements and, if it is the case, of the amplifier and the assembling circuit. In some cases it could be useful to insert a low-pass filter with a resistance and a condenser. It is important that these filters have a time constant such as not to increase that of the measuring tool. The choice of the time constant of the measuring device is particularly important for measures of potential after the interruption of current.

2.6 Interpretation of the results

The measurement figures must be compiled in a report showing the place where the results have been obtained. It is also recommended to write a list of pipe to soil potential with the indication of IR Drops in the areas where the level of protective threshold has not been reached.
This list will particularly highligth the areas where:

- the protective potential threshold with CP Stations switched OFF is not attained
- the potential measurements with CP Stations switched OFF is more negative than the threshold of protection but, taking into account IR drops, the protective threshold has not been reached;
- the cones of voltage with CP Stations switched ON are greater than 100 mV.

For a correct interpretation of the results, the reasons why the protective poptential treshold has not been attained must be explained. This might have happened because of the existence of big voltage cones due to the dimension of the faults, or due to the particularly high resistivity of the grounds, or to IR Drops induced by third party installations (for example voltage cones of other structures protected cathodically). In this last case big IR Drops could be expected in the ground itself, even if the variations of potential with CP current inserted are quite low. In presence voltage cones higher than 100 mV , it should be checked that other buried metallic structures are not influenced.

For the evaluation and the filing of the measurements performed along the line, it is useful to realise a diagram showing the pipe to soil potential and the corrisponding IR Drops in the same positions. This diagram can adequately be obtained through a printer connected to a computer. The diagram of the potential allows an excellent visual control of the pipe to soil potential and of the cones of voltage along the pipeline.

If the potential protective treshold has not been reached and the experts evaluate that the risk of corrosion is hihg, there is a need to perform further measurements. A visual examination of the pipeline route could be made along the section of pipe presenting the maximum risk (Fig. 2-22).

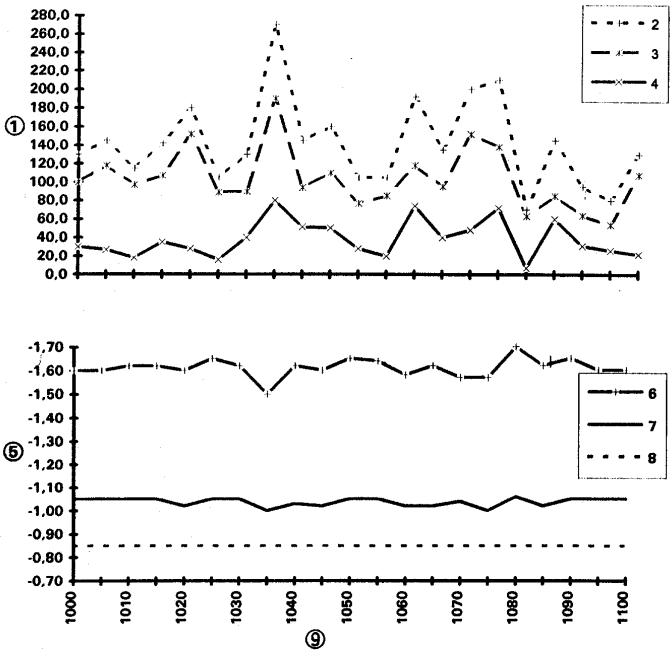

1) cone of voltage in mV
2) cone of voltage with CP current ON
3) cone of voltage with CP current OFF
4) difference between the cones of voltage 2) and 3)
5) potential in Volts
6) potential with CP current ON
7) potential with CP current OFF

8) protective treshold potential (UCu/ CuSO4 =- 0.85V)
9) distances km

Fig. 2-22 Potential measurements performed on a cathodically protected pipeline

In order to establish the area where to perform the excavations, the peculiarities of the pipe should be taken into account (fixed points, joints of expansion, etc.) such as the environmental conditions, the nature of the ground and the present or past influence of stray currents. According to the results obtained during the inspection, it will be decided whetehr to examine or not other sections of the pipeline. Possible corrosion attacks will be examined repairing possible damages.
Efforts will be made in order to reach the threshold of protection wherever that has not been obtained, modifying the regulation of CP stations, or by installing other drainages, or through the restoration of the coating. In order to verify once again that the pipeline is completely protected, it is opportune to proceed to new potential measurements, without IR Drop in the soil, in the same sections where the protective threshold had not previously been attained.
After the works performed on a protected pipeline, or in its proximity, for example after the laying of a parallel pipe, it is opportune to perform a potential survey along the pipe without IR Drops. These measurements allow to make sure that the coating, or the pipe itsef have not been damaged during the works; this could implicate further mechanical damages on the structure in the future.

2.7. Suggestions for the choice of a method for the measurement of potential

In chapter 2 various methods for the measurements of the potential of a buried metallic structure cathodically protected have been described. Each of them presents advantages and drawbacks. Those that, for example, allow to better eliminate errors in the measurements and to get as close as possible the true potential of the structure require complex measurements and can only be performed by specialists. Economically, they are more expensive than less sophisticated measurements. In some cases these last are sufficient to know the electric state of the structure.
This paragraph aims at specifying better the conditions of use and the performances of each of the methods in order to allow the final users addressing their choice towards the method technically and economically more adequate to solve their problems.

2.7.1 Methods of measurements than can be used in absence of stray currents

2.7.1.1. Methods that include ohmic IR drop

The grounds of this method have been inllustrated in the par. 2.1 Even if the potential measurements taken with this method do not always correspond to the real potential of the metal, such measurements could be performed systematically for all the periodical controls of cathodic protection.

This method is simple and not onerous. It is often sufficient if the results obtained are comparable to those previously recorded with more precise methods (without IR Drops).

2.7.1.2 Methods without ohmic IR drop

The ON/OFF potential measurements without IR Drop, as described at par. 2.1 and 2.2, allows to have a more precise idea of the real potential of a structure.

This method, much more binding, therefore more expensive and onerous compared to the one that includes the IR Drops, involves the installation of devices for switching ON and OFF the CP Stations for the duration of the operations of control. The interpretation of the results must be made by an expert.

These measurements are performed when noticeable potential differences are observed according to the method described at paragraph 2.7.1.1. or after important works made nearby the structure.

These measurements can also be performed, for example when the CP stations are put in service.

For performing potential measurements without IR Drops, two methods can be proposed:

- the so-called method "with CP stations OFF, whose principles have been
  described in the paragraphs 2.1 (see also 2.3.2.2.b)
  This method is used in absence of important current of compensation (2.2).

- the method called "without IR Drops ," whose principles have been described at paragraphs 2.2 and 2.3.3, allows to eliminate the IR

Drops deriving both from the protective current and from those of compensation.
Since this method requires very specialised tools and very complex measurements,
it is generally performed only by experts.
This method requires the localisation of the defects of the coating of the structure by
means of methods of electromagnetic type, Pearson or other, otherwise the survey must be performed on the whole pipelines at short distances (every metre).
It is then used as base of reference for other simpler methods.

2.7.2 Methods of measurements that can be used in the presence of stray currents

2.7.2.1 Methods that include the ohmic IR drop

This method has been described at paragraph 2.3.2.2.
It corresponds to the same methodology of measurement illustrated at paragraph 2.7.1.1; the instantaneous measurements have to be replaced with recorded one.
Even if it doesn't allow the acquaintance of the real potential of the structure, its simple use is such that it can be employed in a systematic way for the periodic controls during the operation of cathodic protection plants in presence of stray currents.

2.7.2.2. Methods without ohmic IR Drop

The measure of the potential without IR Drop in this case is complex as it is impossible to interrupt the stray currents during the measurements.
Two methods could be effectively used:

- The **method of the interpolation** described at paragraph 2.3.3.1 that allows to eliminate from the measure all the components of the voltage drop IR, including the one due the stray currents that don't enter directly in the pipe.
  This method, that gives very precise measurements, is quite complex and could
  be used only by a team of experts. It involves the use of a proper device.

- Another **method with CP Current ON** that compares the measurements of the potential taken in periods of operation reduced

(or no operation) of the source of stray currents (generally during the night), with those of normal operation.
This method is illustrated in the paragraph 2.3.2.2 (b). This does not eliminate the IR
drops due to stray currents, but evidences their influence in the measurements of the potential of the structure.

Note 1
To completion of the above said methods, a fixed installation can also be provided in some critical points of the structure with probes having an incprporated reference electrodes (see also chapter 2.3.3.2) that allow to know the potential without IR Drops with sufficient precision of a coating faults having dimensions similar to the one of the probe and to follow its evolution during time.
This technique is specially recommended for works having particularly high isolation, and in presence of stray currents.

Note 2
The measurements of the potential of a structure that is not protected cathodically (natural potential) is performed according to the method described at paragraph 2.7.1.1, or 2.7.2.1 in presence of stray currents.

2.8 Techniques of measurements in the case of global (or “local”) cathodic protection

In some buried complex works, instead of separating electrically the steel work to be protected from other metallic elements in contact with the ground (electrical safety groundings, reinforcing of concrete, pipeline network made by stainless steel or copper), it could be necessary to ensure the cathodic protection maintaining or assuring the electric continuity between all these elements. Such type denominated “global cathodic protection" must be adopted for safety or economic reasons, due to the fact that the complete isolation of the structures to be protected would be aleatory or too expensive (see chapter 8 of the Practical Guide to the Cathodic Protection).
The study of the cathodic protection system in this case, must take into account of the whole of the metallic parts in contact with the ground by using a current such as to attain the protective threshold on all the parts of the steel structure to be protected and particularly in the points of connection with other metallic structures.
This type of protection involves the immission of considerable amount of current, due to the consistence and the number of groundings constituting the extraneous elements of the system.
The application of the protecting current will allow nullifying the effects of the galvanic couplings between the steel to be protected and other

metallic connected structures (copper earthings, concrete reinforcements) with the scope of getting a satisfactory degree of polarisation for the steel structure.

2.8.1 Difficulty in the measurements of the potential

The measurements of the potential of an installation provided with a “global cathodic protection" may be difficult, particularly in the points of connection of the pipe with the earthed structures.
The great amount of current in this type of protection in general produces gradients of potential in the ground (IR drops) a great deal elevated, and distorts the measurements of the potential taken with the electrode placed on the ground.
The method of measurement of the potential with CP current OFF cannot give reliable potential readings. When the protective current is switched OFF, the galvanic couplings existing between the steel to be protected and the earthed structures, because of their different polarisation, give rise to compensation currents, that produce new IR drops in the ground (see the Practical Guide of the Cathodic Protection).
It should be noted that such current of compensation could vary in time, intensity and direction, according to the actual polarisation of the differetn parts of the work.

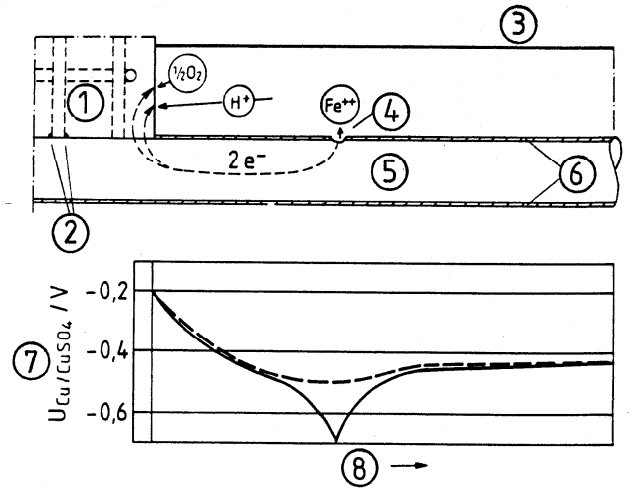

1) reinforced concrete work
2) connection or contact with the pipe
3) soil
4) defect of the coating

5) pipe
6) coating
7) potential
8) distance fom the work in reinforced concrete
--- potential with IR drops (measurements at the surface of the ground)
….true potential without IR drops (measurements at the surface of the pipe)

Fig. 2-23 Corrosion cell due to the contact between the steel of a structure in reinforced concrete and a pipe. Behaviour of the potential

2.8.2 Measurement techniques

Due to the difficulties mentioned at paragraph 2.8.1, we could consider that the installation is composed by two different parts.
One includes the sections of buried pipelines distant from the groundings, for which the measurement of the potential doesn't give any problems.
The other one includes the parts of the buried pipe that are in proximity of grounded structures. On this part the Voff potential measurements only serve for comparison, but never for an exact evaluation of the potential. On the other side these measurements allow observing the variation of the potential during time in different critical points (intersections with earthings in copper, proximity of foundations) as well as in the presence of stray currents.
In order to verify the potential of a structure with global cathodic protection, the method of measurements of the potential with CP current ON is generally used.
To be sure that the risk of corrosion due to the formation of galvanic cells between different metals has been eliminated, it must be verified that the protective current enters the pipe to be protected in correspondence of coating faults.
It such case one can be sure that the voltage due to galvanic cells has been eliminated, then also its corrosive effect.
To ascertain that the correct level of cathodic protection has been achieved, it must be verified that all coating faults are reached by a sufficient current density.
This density, which cannot be directly measuredy, could be evaluated indirectly by using probes (see paragraph 2.3.3.2 and 2.7.2.2. – Warning 1).
In Fig (2-24) the behaviour of currents in the soil and the positioning of one of such reference probe towards the pipe and his connection through a cable is represented.
In the example shown, without the application of a global cathodic protection, an exit of current can be observed from the probe, due to the effect of galvanic cells.

On the contrary, when global cathodic protection is in operation, an entrance of current in the probe can be ascertained.
Together with the measurements of current, also the real potential can be measured, that is without IR drops (polarisation potential) of the reference sample.

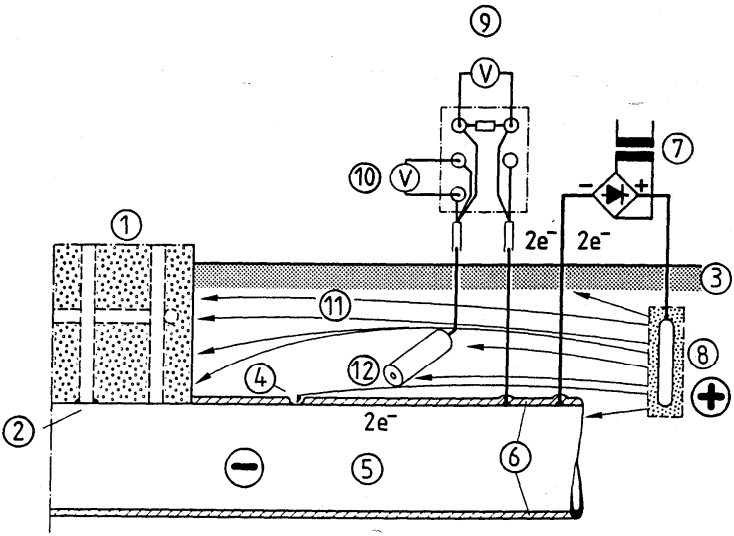

1) structure in reinforced concrete
2) connection or contact with the pipeline
3) soil
4) coating defect
5) pipeline
6) coatin
7) CP station with impressed current (transformer/ rectifier)
8) ground-bed
9) current of protection to the probe
10) potential of the probe
11) protective current
12) probe with electrode incorporated

Fig. 2-24 Current pipe after the activation of the cathodic global protection with connection of a probe for measurements of control

III – MEASUREMENT OF CURRENTS

Differently from voltmeters, the internal resistance in ammeters must always be very low compared to that of the circuit of measurements.

3.1. Measure of the current circulating in the pipeline

As happens with the measurements of potential, the measurement of current intensity circulating in a pipeline is fundamental for the search for the origin of corrosion, to localise coating faults and to evaluate cathodic protection. Taking into account the low longitudinal resistance of the pipe (10 mΩ per Km of pipe, for a nominal diameter of 700 cm and a thickness of 8 mm), the current circulating along a pipeline cannot be measured directly.

The currents which pass through the coatings of cables or pipelines are then calculated in an indirect way, using Ohm's law, by measuring the IR drop in a part of the pipeline having known resistance and considered as a shunt.

The resistance of a linear conductor having resistivity ρ_a is given by the following formula:

$$R = \rho^{\circ} \frac{l}{s} \qquad (3.1)$$

For a pipe having external diameter D and wall thickens e, the normal section of the wall S, is equal to: $S = \pi e (D - e)$.

The longitudinal resistance R' per unit length of the pipe is:

$$R' = \frac{R}{l} = \frac{\rho_a}{\pi\, e\, (D - e)} \qquad (3.2)$$

Taking into account of the practical units, this resistance is expressed by:

$$R'\ (\mu\Omega/m) = \frac{10^4\, \rho_a\ (\mu\Omega/cm)}{\pi e_{mm} (D_{mm} - e_{mm})} \qquad (3.3)$$

The resistivity of steel (ρ_a) is a function of the type of steel and the temperature.

For more common types of steel the resistivity is the following:

Type of steel	A34	A60	X52	X60	X70	X80
Resistivity of the steel at 20 °C (mohm.cm)	17,0	18,0	22,6	24,1	25,5	28,3

Table 3-1 shows for different types and characteristics of steel the value of the longitudinal resistance for a pipe length of 1 metre.
These values can only be used for welded pipelines, because the presence of mechanical joints, valves and accessories would increase the longitudinal resistance of the pipeline.
The resistance of a length of 30 m of pipe is of the order of 0.3 mΩ for a pipeline diameter of 700 mm. The measure of an IR voltage drop of at least 0.1 mV makes it possible to detect currents greater than or equal to 0.3 with sufficient precision. For diameters larger than 700 mm, it could be necessary to increase the length of the section of measure. Lengths from 50 to 100 m are generally sufficient.
When a very precise measure is required, it is not always advisable to directly use the values in the Table 3.1. In practice, the wall thickness of steel pipes without weldings could vary at least 10% and those of the pipes of steel joined with weldings at least 5%. The conductivity of the steel used for the production of a pipe is not always precisely known.
Because of this it is necessary to proceed to a calibration of the system of measurement of the current, by means of the so-called method of **“4 measuring points”**.
For this, four cables are welded on the pipeline (see Fig. 3-1). The two external cables assure the feeding of current to the section under measure and must be of large section. The two inner cables serve to measure of the IR drop. The distance between the points A and B must be greater than 0.1 m. The distance between the B points and C could reach 100 m.

Diameter	External diameter	Thickness	R'= resistance for meter of pipeline Type of steel					
			St34	St60	X52	X60	X70	X80
DN	DN	e	R'	R'	R'	R'	R'	R'
mm	mm	mm	µΩ	µΩ	µΩ	µΩ	µΩ	µΩ
1200	1220	16,80	---	---	3,56	3,80	4,02	4,46
1100	1118	15,50	---	---	4,21	4,49	4,75	5,27
1000	1016	10,00	5,38	5,70	---	---	---	---
		14,10	---	---	5,09	5,43	5,75	6,38
900	914	10,00	5,99	6,34	---	---	---	---
		12,70		---	6,28	6,70	7,09	7,87
800	813	8,00	8,40	8,90	---	---	---	---
		11,40	---	---	7,87	8,39	8,88	9,86
700	711	7,10	10,83	11,46	---	---	---	---
		9,90	---	---	10,36	11,05	11,69	12,98
600	610	6,30	14,23	15,06	---	---	---	---
		8,50	---	---	14,07	15,00	15,88	17,62
500	508	6,30	17,12	18,13	---	---	---	---
		7,90	---	---	18,21	19,42	20,55	22,80
400	406	6,30	21,49	22,75	---	---	---	---
		7,10	---	---	25,40	27,09	28,66	31,81
300	324	5,60	30,35	32,13	---	---	---	---
		6,50	---	---	34,86	37,17	39,33	43,65
200	219	4,50	56,06	59,36	---	---	---	---
		6,30	---	---	53,68	57,25	60,57	67,22
100	114	4,00	122,98	130,22	---	---	---	---
		5,60	---	---	118,51	126,37	133,71	148,39

Table 3-1: Longitudinal resistance of steel pipes (micro-ohms)

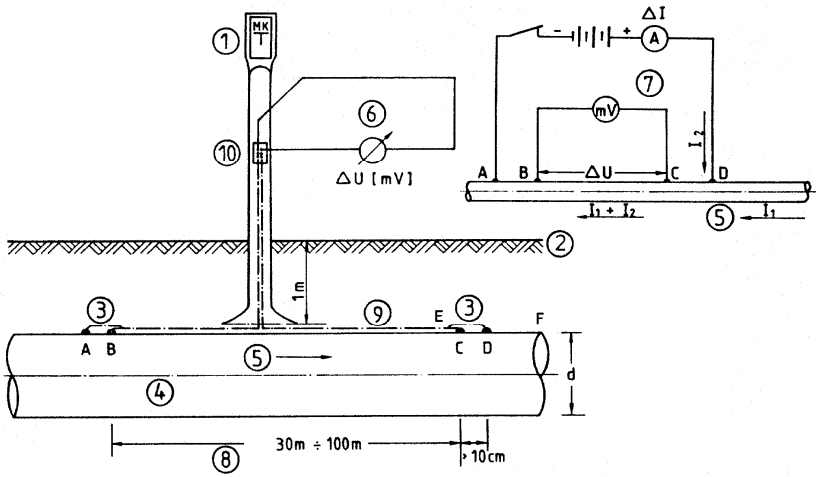

1) test point
2) soil
3) contacts for the measure
4) pipeline
5) longitudinal current
6) ammetric measure
7) determination of the resistance of section of pipe
8) section under measure
9) measuring cables (2 x 2.5 mm2 Cu)
10) point of measure

Fig. 3-1 Ammetric test point for the determination of the resistance of the section

As a first step the measure the IR drop voltage ΔV_1 between the points B and C due to the current I_1 that circulates in the pipeline (current of protection and/ or stray currents).
Subsequently, by means of a generator of current (battery of accumulators) a current I_2 between the points A and D is circulated, and one measure an IR drop voltage ΔV between the points B and C.
From such measurements the resistance R_{BC} of the BC trunk is drawn applying the formula:

$$R_{BC} = \frac{\Delta V \,.\, \Delta V_1}{I_2} = \frac{\Delta V_1}{I_1}$$

The signs of V and v must be taken into account in this formula. They depend on versus of the current I1 and I2.

The current $\mathbf{I_1}$ that circulates in the pipeline is then:

$$\mathbf{I_1} = \frac{\Delta \mathbf{V_1} * \mathbf{I_2}}{\Delta \mathbf{V} - \Delta \mathbf{V_1}} \qquad (3.4b)$$

The signs of these IR drops must be taken into account; they depend on the direction of the currents $\mathbf{I_1}$ and $\mathbf{I_2}$.

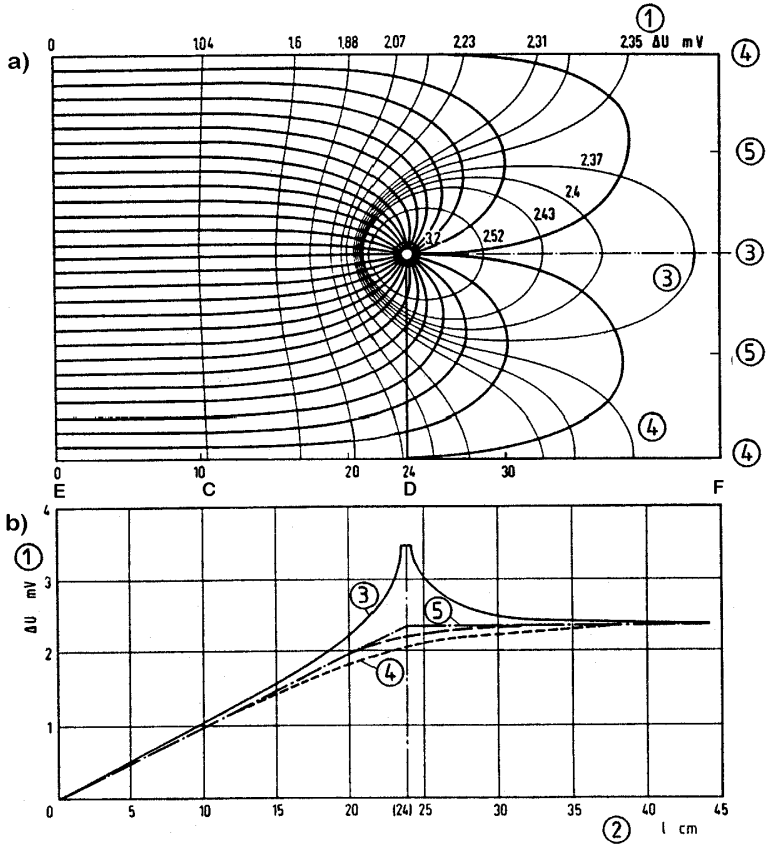

1) IR drop of ohmic voltage
2) length of the pipeline
3) pipeline (position hours 12)
4) pipeline (position hours 6)
5) pipeline (position hours 3 or 9)

Fig. 3-2 Spreading of the current and of the voltage along a pipeline DN 80 with input of current at the point = 24 cm. The IR drop voltage is evidenced in the lower graph.

Fig 3.2a shows, in a graph showing the cylindrical surface of the section E-F, which comprises the section C-D of the pipe shown in Fig. 3.1. (diameter 8 cm and thickness 3.5 mm) the lines of current $\mathbf{I_2}$ (68A) circulating towards E on the surface starting from the point D placed at 240 mm from E (that is the section of pipe where the IR drop is measured).
For the realisation of this set for measuring the current with the 4 point method of the, a distance of about two times the diameter of the pipeline between the measuring test point AB and DC should be maintained. In order to avoid excavations which are too long on large diameter pipelines, the arrangement of the current and potential test points can be made in two points diametrically opposite on the pipe.
After the setting of any pipeline section, by using the 4 point method of the, allowing the determination of the longitudinal resistance with sufficient precision on the basis of the formula (3.4), further test posts could be made with only two cables.
A sufficient number of such simplified test points (with two cables) should be realised to determine the direction and the amplitude of the current circulating in the pipeline.
If the longitudinal resistance of the pipeline is higher than 0.5 mΩ/m, a distance of 1 meter between the two cables is sufficient to obtain good precision.
The measurement of the current circulating in the pipelines, performed contemporaneously with the potential measurements gives a good indication of the areas of possible danger of corrosion.

3.2. Equipment for the measurements

The IR drop measured on the pipeline is in the order of millivolts. For such small differences of potential , it's necessary to use voltmeters equipped with amplifiers with the appropriate sensitivity.
It is also possible to measure such small voltages with direct reading or by using electromechanical millivoltmeters. Their internal resistance, between 1 and 20 K Ω/V, is always sufficient in relationship to the resistance of the circuit of measure of the current. In the cases in which their internal resistance is low, the resistance of the cables of the measuring circuit must be taken into account (1,2 Ω for 100 for a copper cable having a section of 1.5 mm^2). In the case of amplified voltmeters, the cables should be maintained as near to one another as possible when crossing roads, to avoid the formation of rings sensitive to the magnetic induction due to electrical systems of vehicles.
It should be also noticed that the IR drop measured voltage is in the same order of 0.1 mV as the one created by thermocouples due to temperature variation on the junction of metals of different nature (e.g. steel pipelines and connections made with copper). Also in the presence

of humidity the measure could be distorted due to a formation of a cell if there is a false and resistant contact. This is the reason why the resistance of the circuits before proceeding to the measures must be accurately verified.
To realise a temporary test point it is possible, after the localisation of the pipeline by using a pipe locator, to introduce a mild-steel pointed coated probe (e.g. 10 mm of diameter and 2 m of length into the ground to reach the metal,.
This can be done despite very small holes in the coating that will subsequently be protected by cathodic protection.
For sections of pipelines exposed to the open air or when excavations are made, it is possible to get a good contact with the help of metallic pieces whose own weight (around 1 kg) assures a sufficient pressure on the pipeline, or with the magnet represented in fig. 3.3. For small diameter pipelines, the use of collars or crocodile-type devices gives a good contact between the pipeline and the cable of the test of the potential.

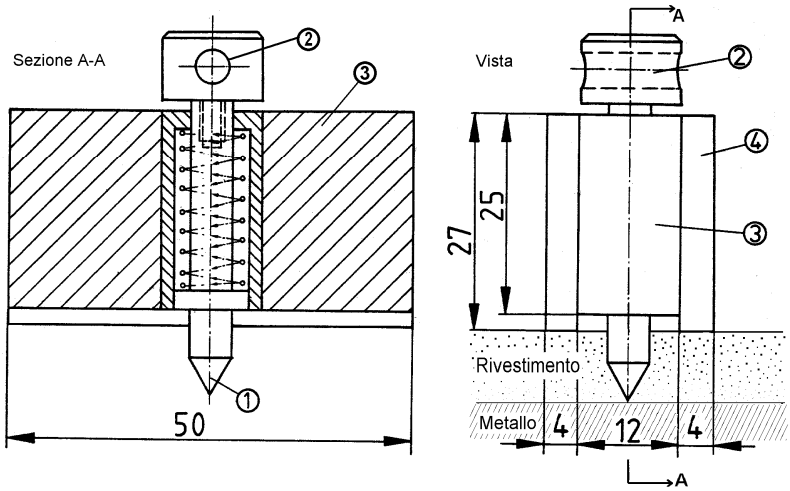

1) point in moderate steel
2) bore for the link of the cable of measure of 4 mm of diameter
3) magnet
4) iron

Fig. 3-3: Magnetic contacts for the connection to the pipelines

3.3. Evaluation of CP the current density necessary for cathodic protection and of the

In order to calculate the requirement of cathodic protection current, it is necessary to protect the structure for a long period. After calculating the current density needed for achieving cathodic protection, and measuring the ohmic IR drop = (Uon- Uoff) in the soil, the resistance of isolation of the pipeline could be calculated. It corresponds to the sum of the resistances in parallel with the porosity and of the defects of the coating in the zones where the metal is in contact with the soil.

Fig, 3.4. illustrates the method to determine the protective current density and of the average resistance of the faults. In the point O, a current I_0 is delivered to the pipe by using a temporary cathodic protection station and a ground-bed. A current I_n flows along the section of the pipeline under examination. Because of the low longitudinal resistance of the pipelines joints, the potential pipe to earth decreases very slowly if the coating of the pipeline is of good quality.

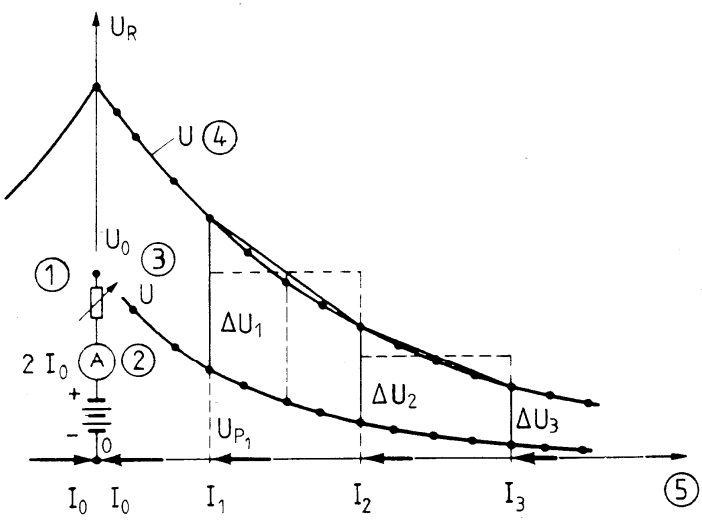

1) anode
2) ammeter
3) Voff potential
4) Von potential
5) pipeline

Fig. 3-4 Determination of the density of the protective current and isolation resistance of a pipeline

It is possible to calculate an average value of the current density and the isolation resistance of a pipeline by linear interpolation. This is true especially in the case where the distances between the ammetric test posts 1, 2 and 3 are small in relationship to the length L of the pipe protected cathodically (1, 2 km). The intensity of the current (I1, I2, I3. .In) is measured on each test point. The current which feeds each section between the test points is then calculated

$$\Delta I_n = I_n - I_{(n+1)} \qquad (3.5)$$

The circulation of the current in the soil creates, in correspondence of the defects of the coating of the pipeline, the IR drops ΔU1, ΔU2. .. ΔUn, detecting Von – Voff values at each section.
Their average value is then calculated for each section:

$$\Delta U_{n(average)} = 1/2\,(\Delta U_n + \Delta U_{n+1}) \qquad (3.6)$$

where $\Delta U_n = (U_{on} - U_{off})$

The ratio of this average value and the value of the current that feeds the section, multiplied for the surface (S) of such section, gives the average isolation value of the coating. This value is generally expressed in Ω*$\mathbf{m^2}$.

$$\text{Average } R = \frac{(A)\ \text{average}}{In} * S \qquad (3.7)$$

The average density of the protective current of the section of pipeline 1, 2. .n is deduced by the ratio of $\mathbf{I_n}$ with the area of the section of the pipeline.
This current density is expressed in A/ $\mathbf{m^2}$.

$$= \mathbf{I_n / S} \qquad (3.8)$$

This average density of current, depends on the average level of potential with CP current switched OFF of the section of pipeline under examination.

If more than one CP station influences the section of pipeline under measure in the same time, it is necessary to disconnect them contemporaneously through synchronised interrupters.

IV- MEASURE OF RESISTANCES

To measure the resistivity of the electrolytes or the resistance of metallic materials in contact with electrolytes, alternating current is always used, with a frequency ranging between 110 and 1000 Hz, so that the results are not falsified by polarisation phenomena due to dc current. The measure is generally performed by using the four-electrode technique, in order to eliminate the IR drops due to the soil resistance in correspondence to the measuring electrodes.

4.1 Measurement of soil resistivity

The resistivity of an electrolyte, i.e. the soil, constitutes an important factor for evaluating its corrosivity. In fact, the ohmic drops in a cell circuit greatly depend on the soil resistance and the polarisation resistance that, if high, lower soil aggressivity.
The resistivity of the soil can be measured by means of a measuring cell with samples of soil, directly in situ by using the 2 or 4-electrode methods.

4.1.1 Measure of the resistivity on samples of soil

The resistivity of the soil can be measured in the laboratory on samples of soil, by means of the cell illustrated in Fig. 4-1, fed with alternating current for avoiding the effects of polarisation of the electrodes.
Starting from the formula of the resistance of a substance of L thickness between two faces of S area, the equation of the resistivity of the soil could be expressed as:

$$\rho = R \frac{S}{L} = \frac{U * S}{I * L} \qquad (4.1)$$

Because the sample of soil may suffer a great modification of its state (arrangement, airing, and damp), the resistivity so measured doesn't correspond exactly to the one of the original soil in situ.

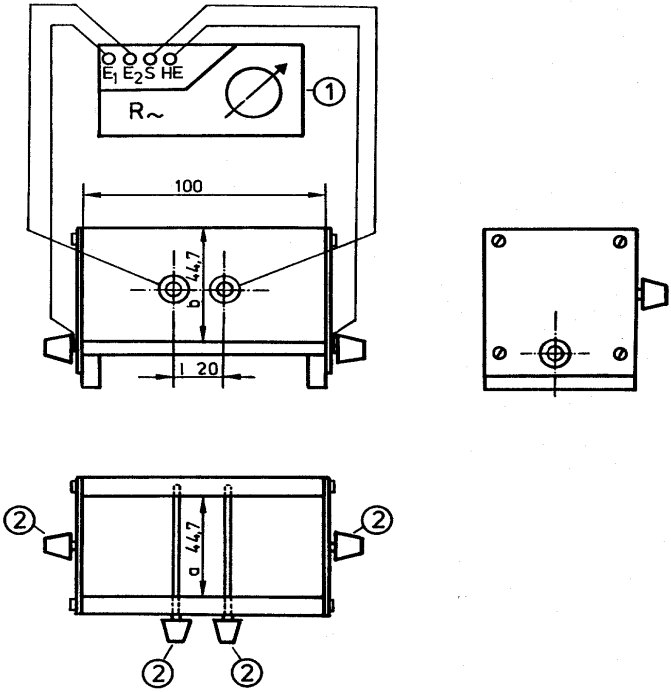

1) point of measure of the resistance in alternating current
2) clamps

Factor of form from cell of measure of the resistivity: F °= to* b/ l; F °= 44,7* 44,7/ 20= 100 mm

Fig. 4-1 Cell for the measurement of soil resistivity (dimensions in mm)

With this cell of measure precise values of the resistivity are obtained only with very homogeneous soils. But the precision of measure obtained with heterogeneous soils is still sufficient if the method of the four electrodes is adopted, thus eliminating the influence of the resistance of contact of the faces from cell with the samples of soil. With this method the feeding of the current and the measure of the voltage is realised with a separate couple of electrodes, like the ones described at para. 4.1.2.

The equation 4.1 is valid in the case of homogeneous distribution of the current, if the distance between the two inner electrodes for measuring the voltage is L.

4.1.2 Measurement of soil resistivity on site

In the field of cathodic protection, the most common method for measuring soil resistivity soil is that of the four electrodes disposed at the surface of the soil (Fig. 4.2).
The distribution of the current and of the potential corresponds to that of an electrical dipole. Because the lines of current go towards A and B, in these points the maximum IR drop is concentrated, while the electric field is relatively homogeneous between the measuring electrodes C and D.

$$\rho = R \cdot f(a,b) = \pi \ R \ \cdot \ (b + \frac{b^2}{a}) \qquad (4.2)$$

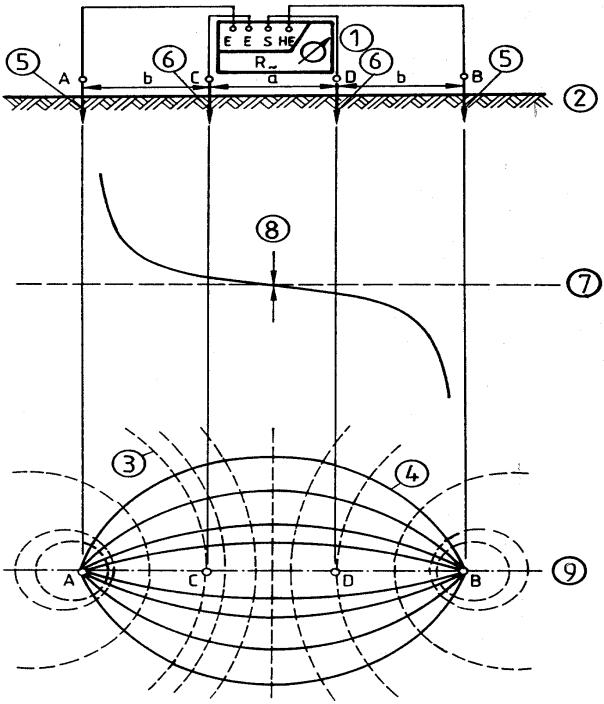

1) bridge of measure of the resistance i in alternating current

2) soil8)

3) equipotential line

4) line of current

5) electrodes of injection of the current

6) electrodes of measure

7) course of the potential between the electrodes A and B point of symmetry

9) electric field in the soil between the electrodes of current

Fig. 4-2 Division of the current and of the voltage in the measure of the electric resistivity of the soil according to the Wenner method

Schlumberger, on the basis of geo-electricity, has drawn up the following equation to give the resistivity of the soil:

$$\rho = R*f(a,b) = \pi \left(b + \frac{b^2}{a} \right) \qquad (4.2)$$

Maintaining constant the distance between the inner electrodes (for example 1.6 m) and increasing the distance (b) in a symmetrical way (for example from 1.6 to 3.2 m) the depth of investigated soil is increased. In the Fig. 4.3 has represented the f function (a, b).

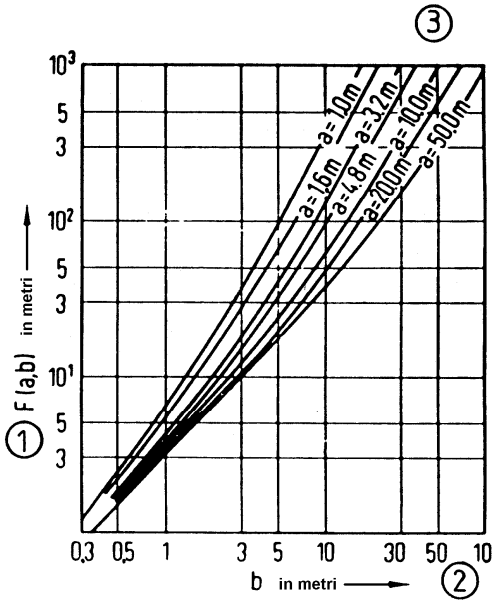

1) factor of form
2) distance between the D electrodes, B or A and C
3) distance between the electrodes C and D

Fig. 4-3 Equation: in operation results of the varying b (*a* is the parameter)

If the four electrodes are equidistant (a = b) (Wenner method) the equation (4.2) becomes:

$$\rho = 2\,\pi \mathbf{a}\ \frac{U}{I} = 2\,\pi \mathbf{a}\ \mathbf{R} \qquad (4.3)$$

If **a** is expressed in metres and R in ohm, ρ is expressed in **Ω.** m.
The Wenner method is essentially used for measuring the resistivity of the soil in proximity of pipeline right of way and of the zones where ground-beds for impressed current anodes should be installed.
The Wenner method also allows to determine the stratification of the soil, starting from the measure of the apparent resistivity of the same (s). The layers of soil having lower or higher resistivity (2) situated under those having resistivity (1), greatly influence the measured values (s). In Fig. 4.4 the variation of ρ is represented in relation to the ratio between the distance (a) of the measuring electrodes of measure and the thickness (t) of the upper layer of soil and of the relationship ρ_2/ρ_1.

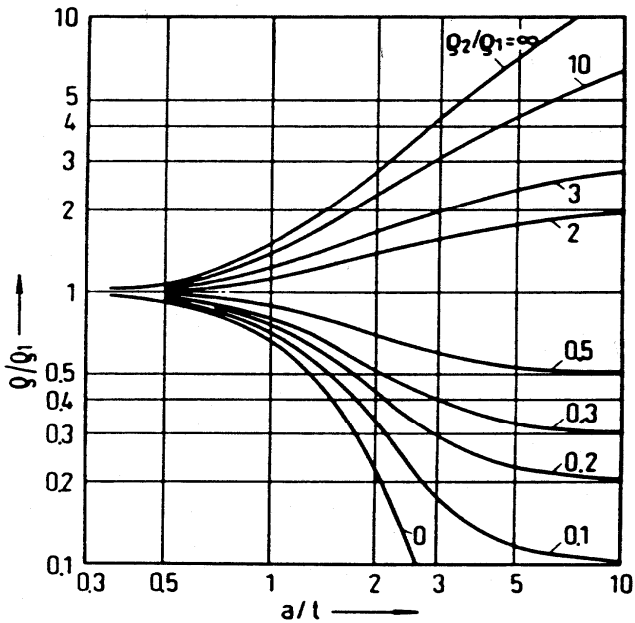

= apparent resistivity
t= thickness of the upper layer having resistivity ρ1.
a = distance between the electrodes of measure

Fig. 4-4 Apparent resistivity of the soil in presence of two layers of soil having resistivity ρ_2 and ρ_1.

Since the equation 4.2 is valid for hemispherical electrodes, the use of electrodes in the form of a stake gives rise to an error in the measurement. So that this error does not exceed 5%, the length of the buried part of the stake must be smaller than 0.2 ***a*** and its diameter smaller than 0.04 ***a***.
Cold involves an increase of the resistivity of the soil. While it is possible to insert the electrodes in frozen layers of small thickness without producing significant errors in the measurement, it is impossible to measure the resistivity of soils whose shallow layer has frozen for more than 20 cm.
The above method describes the four poles that are disposed at the surface of the soil and gives the average resistivity for fairly large extensions. Methods where the electrodes are inserted in the

soil will measure in succession the local resistivity of a layer of soil or an of clay of small dimensions.
In the Shepard method (Fig. 4.5/ 1) the electrode on the right has only the function of an earthing, while that on the left supports a special steel probe, electrically isolated. Only the resistance of the tip is made, which is proportional to the soil resistivity.
In the Columbia probe (Fig. 4.5./ 2), the body of the electrode in the ground represents the counter-electrode.
These devices give values of resistivity generally greater than the real ones. In effect the method of measure implies that the contact between the electrodes and the soil is permanently effective, which is not always true as the ground could be removed at the moment the stakes are pushed into the soil.

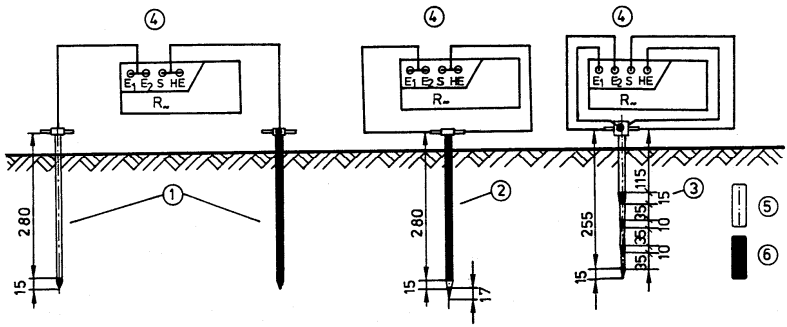

1) Shepard reed
2) Columbia reed
3) Wenner stake
4) point of measure of the resistance in alternating current
5) body in plastic material
6) inox steel

Fig. 4-5 Stakes of measure of the resistivity: dimensions and disposition

In order to avoid the measuring errors from the zone nearby the electrode, the electrodes of current and voltage must be positioned on a same alignment (electrode Wenner Fig. 4.5/ 3).
In this case, as the current diffusion is homogeneous, soil resistivity is given from:

$$\rho = 4 \pi a \ R \qquad (4.4)$$

Since the electrode Wenner is sensitive to the mechanical stress, it can only be used in soft soils, or inserted into holes previously performed.
For this kind of electrodes the resistivity of the soil is drawn from the formula 4.1. and is equal to the product of the impedance for a factor of form (Fo) that is generally obtained by calibration (ρ = RFo). The Table 4.1 gives some values of Fo for the three types of electrode.

Table 4-1 Factors of form of the different types of electrode to reed

electrode	resistivity of the soil in .cm	resistance of RA earth in	factor of form Fo in cm
Shepard reed	2000	385	5,2
Columbia reed	2000	590	3,4
Wenner reed	2000	53	37,8

The results of the measure of resistivity could be influenced by the presence of pieces of bare metal in the soil. For this reason, particularly in urban agglomerations and under roads, the measured values of the resistivity of the subsoil are sometimes lower than the true ones. Vice versa, the measures made parallel to a well isolated pipeline or to one coated with plastic material are not greatly influenced. It is recommended in urban agglomerations to make subsequent measurements perpendicularly to each other. Equally, in the case of choice of a soil for the installation of ground-bed anodes for impressed current systems, it is advised measurements are performed by increasing the distance between the electrodes (e.g. 1.6 m, 2.4 m, 3.2 m) for examining the course of the resistivity of the soil to different depths.

4.2 Grounding resistance measurements

The measurement of the resistance to earth of sacrificial anodes or of ground-bed anodes for impressed current systems is performed with the method of the three electrodes (Fig. 4-6). The current is sent between the earthing to be measured and an auxiliary test earth. The voltage existing between the earthing and an auxiliary electrode is then measured.
The distance between the auxiliary earth and that under measurement must be equal or greater than 4 times the length of

the earthing under test, with a minimum distance of 40 m. The distance between the auxiliary electrode and the earth under test must be approximately equal to double the length of the earth under test with a minimum distance of 20 m.

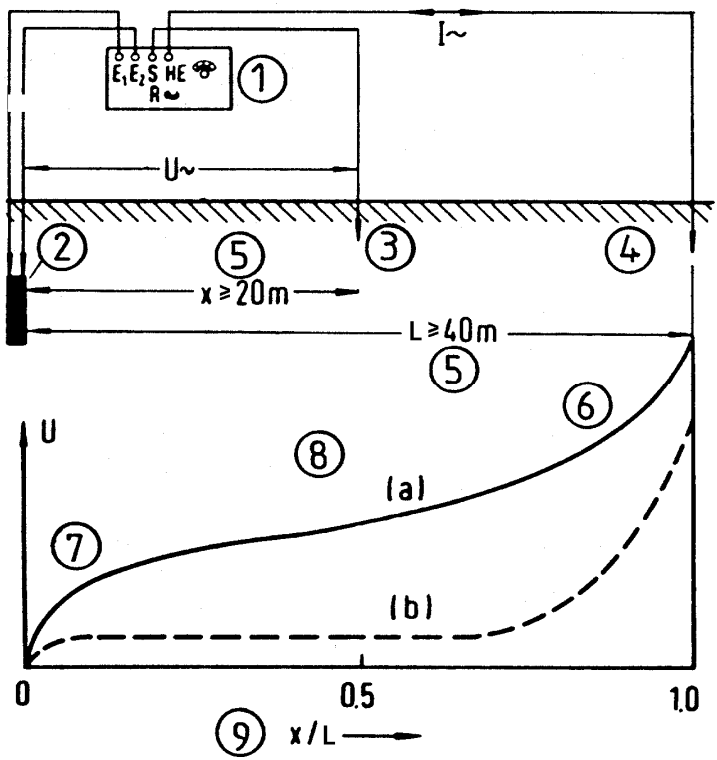

1) bridge for measuring the resistance in alternating current
2) earth to be measured
3) auxiliary electrode
4) current electrode
5) distance to be adopted
6) cone of voltage of auxiliary earth
7) cone of voltage of earthing
8) voltage variation according to the position of the auxiliary electrode

Fig. 4-6 Measure of the resistance of an earthing

4.2.1. Resistance of small structures

It is not possible to measure the resistance to earth of very long structures like pipelines or rail with this method, as the auxiliary electrodes would need to be placed at excessive distances.

When the resistance at the sides of insulating joints is measured, only small sections of the pipeline can be measured, whose lengths are a function of the frequency used.

If the resistance to earth of the structure to be measured is in the same order of magnitude as that of the auxiliary earth (Fig. 4.6, curve a), greater precision with the electrode-probe set in central position between the two earths is obtained. But often the resistance of the earth under measure is lower than that of the auxiliary earth (b curve). It is therefore useful in this case for the auxiliary earth to be similar to the earth under measure.

In general the values of resistance measured are lower when the distance between the electrode-probe and the earth under test is reduced. The values are instead over-estimated when this distance is excessive and approaching near to the cone of voltage of the auxiliary earth. The bolts of the enclosures, the metallic poles, etc. can be used as the auxiliary earth.

When the measurements are made on cathodically protected pipelines with coatings with high isolation values, the capacitive effect becomes preponderant. The value of resistance read on the tool is much lower than the real one. In this case it is advised to use dc current, with the Von – Voff method.

Table 4.2 shows the formulas for calculating the value of earths according to their geometric form and the relevant development of the cone of voltage.

4.3. Devices for the measurements

To measure soil resistivity, tools with four clamps are used, known as Megger tools.

In the case of the four electrodes, the resistances of the electrodes of measurement and those of the tests of auxiliary earth do not create an error, as the circuit of current is separated from that for measuring the voltage. Modern digital tools are generally equipped with an automatic setting, allowing the direct reading of the R.

Formulas 4.2 or 4.3 allow the resistivity to be measured .

?

Table 4-2 Formulas for calculating different types of earths

??

I form of the anodes
II disposition of the anodes

III resistance of earth
IV note
V cone of voltage
1) half-sphere: radius [ro], d [diameter]
2) circular plate: I radius [ro], d diameter
3) anode : l length, d diameter
4) horizontal anode: l length, d diameter
5) sphere: d diameter; depth of t laying
6) spherical field
7) surface
8) depth
9) approximate a (r, c)>> 1

Table 4-2: continuation

I form of the anodes
II disposition of the anodes
III resistance of earth
IV note
V cone of voltage
1) earthing with circular form: width of the d ribbon, ray [ro]
2) vertical anode: l length, d depth, depth of t laying
3) vertical anode
4) horizontal anode: l length, d diameter, depth of t laying
5) horizontal anode
6) F is an integral elliptic

Industrial alternating current (16 2/ 3 Hz or 50Hz) circulating in the soil will not influence the measurements, as the frequency of the generator is selected outside that of the industrial alternating current and its harmonics.

The same tools with four clamps could also be used also for the measurement of the earth resistance with the three-electrode method , described in paragraph 4.2., by short-circuiting the two clamps denominated E1 and E2 (see Fig. 4.6).

V- LOCALISATION Of CONTACTS WITH OTHER METALLIC STRUCTURES HAVING LOW EARTH RESISTANCE

The pipelines laid many years ago in the subsoil show isolation defects due to the contact with extraneous pipelines, cables or other grounded installations, casings , bridges or sheet pilings. These defects could also be present on new pipelines and can only be discovered when cathodic protection is activated. These contacts have often a very low resistance, so they render ineffective the general cathodic protection on a complete section of the pipeline; it is then necessary to locate these contacts and eliminate them.

Through the examination of the curves of $\mathbf{U_{on}}$ and $\mathbf{U_{off}}$ potential and the knowledge of the current circulating in the pipeline the existence of contacts with other structures can be suspected and subsequently it can be established how much they hinder cathodic protection effectiveness

As an example, figure 5.1 represents the course of the $\mathbf{U_{on}}$ and $\mathbf{U_{off}}$ potentials and currents circulating in the section of pipeline with a diameter of 800 mm, 10 mm thickness and 9 km length, whether or not in contact with other installations having a low ohmic resistance towards earth.

Figure 5.1a shows the behaviour without contacts, while figure 5.1b represents the same but with a contact nearby the extremity (insulating joint).

The contact illustrated in figure 5,1c is situated between kilometres 4.630 and 5.360. The current density on this trunk is clearly higher than on the others. The measured potential $\mathbf{U_{off}}$, which is not sufficient, is the consequence of a metallic contact of the pipe with another metallic structure having a low resistance towards earth.

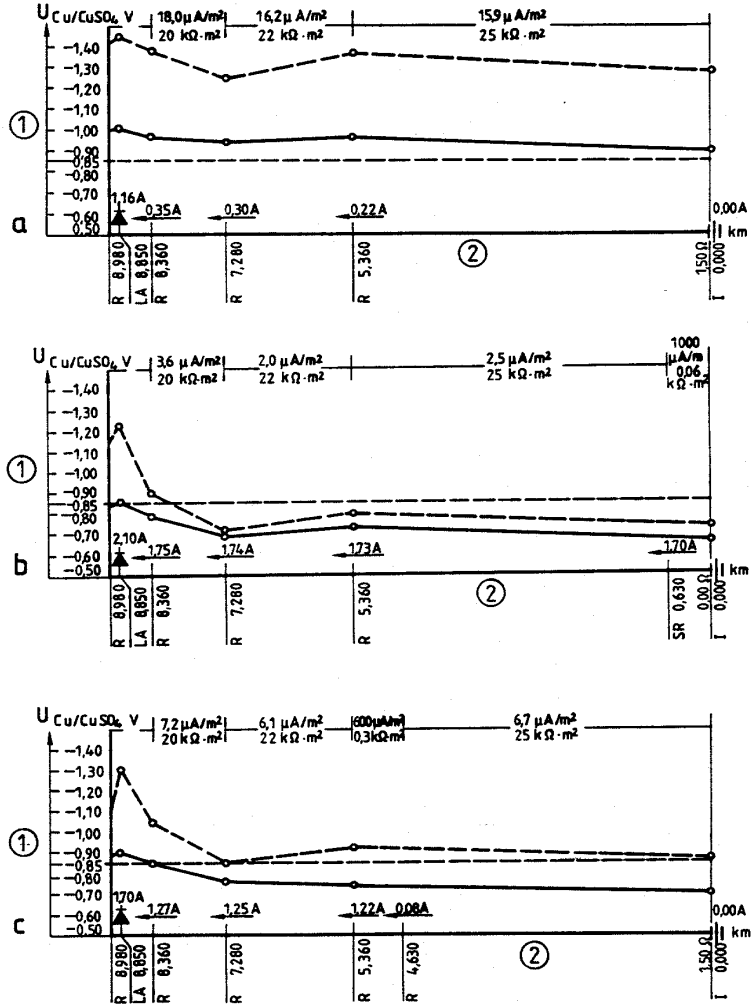

1) potential
2) length (km)
a- without defects
b- defect nearby the extremity of the pipeline (insulating joint)
c- metallic contact with another pipeline (between the km 4.630 and 5.360

Fig. 5-1 Potential and longitudinal current circulating in a pipeline protected cathodically

The measurement of the current circulating in the pipeline makes it possible to locate the zones of contact with a margin of error of some hundred metres. The contacts could be subsequently localised more precisely by measuring the $\mathbf{U_{on}}$ and $\mathbf{U_{off}}$ potential on accessible points of such pipelines (test points, valves and others). If the potential of these pipelines shows positive values when the cathodic protection current is switched on, then there is no contact between them and the pipeline. Only an interference can be evidenced in these cases.
If, on the contrary, there is a metallic contact, the current of protection equally penetrates in these pipelines and their potential will also become more negative. If this method doesn't allow the contact with the pipeline to be located, it is necessary to locate the defect by using one of the methods described in the following paragraphs.

5.1 localisation of contacts by using DC methods

The localisation of the contacts by means of continuous current is based on Ohm's law. It is assumed that, because of its good coating, the section under measurement whose longitudinal resistance is known as **r** (expressed in Ohm.m) does not absorb any current. The current I goes through the extraneous pipeline to reach the pipeline to be protected. The location of the defect can be calculated by the IR drop ΔU detected along the section under measurement.

$$Lx = \frac{\Delta U}{r\,I} \qquad (5.1)$$

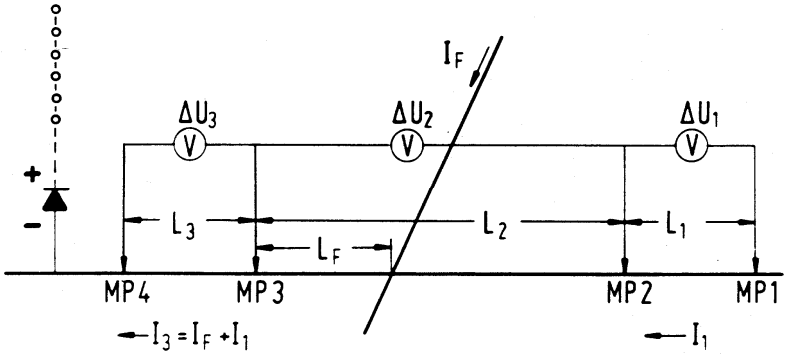

Fig. 5-2 Location of defects in case of metallic contacts with a pipeline

But, this exemplification is only possible in the cases where there is a direct contact or a low resistance contact between the structures and no other current is flowing on the pipeline. Otherwise, the current that influences the section under examination must also be measured and taken account of in the calculation. The same procedure is needed for locating a contact with an unknown pipeline. The figure 5.2 shows the measurements of current to be performed upstream and downstream of a presumed point of contact that allows to calculate the distance from the defect on the basis of the formula:

$$L_x = \frac{U_2 L_1 L_2 - U_1 L_2 L_3}{U_3 L_1 - U_1 L_3} \quad (5.2)$$

The dc current is also adequate for locating the contacts that could exist between a pipeline and its casing. The casings that are not coated can nullify the effectiveness of the cathodic protection in the case of a low resistance contact with the pipeline. After the localisation of the defect by using the equation 5.1 with a certain approximation, the casing can be put in the open air in the point calculated. In fact, in the point of contact the current flows from the casing to the pipeline. A subdivision of potential similar to the one represented in figure 5.3 (upward, right). The measurement of the IR drop at the surface of the pipeline through two test points makes it possible to locate the point of contact with precision.

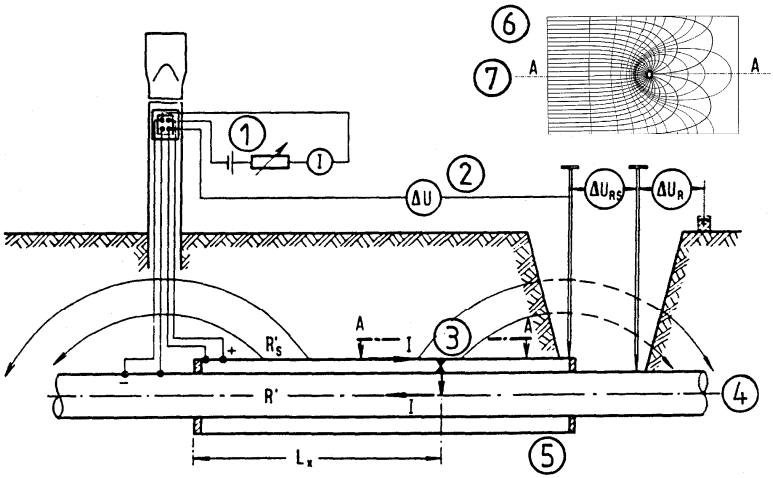

1) feeder for testing
2) IR drop of voltage
3) contact pipe-casing
4) pipeline
5) casing
6) representation of the potential (sightfrom the lower part)
7) A-A section

Fig. 5-3 Localisation of defects in case of metallic contact between pipeline and casing

5.2 localisation of contacts by using AC methods

Although the proximity of two parallel pipelines or a high voltage line makes it more difficult the localisation of the defects with ac. methods, this procedure is in general more rapid and easier. This method gives at least an idea of the phenomena. The method is based on the electromagnetic field of a current of audible frequency that flows in the pipeline. A low frequency generator adjustable to 10 Hertz delivers a current that circulates in the pipeline and returns to the generator through an earth placed at a distance of about twenty metres.

The receiver consists of a receiving spool where the electromagnetic field of the alternating current circulating in the pipeline induces a voltage. This voltage is detected with the help of a detector or amplified to a sufficient level in order to be listened with hear-bonnets. The receiver is equipped with a selective filter that enables the frequencies of 50 and 16 2/ 3 Hertz to be weakened in the ratio of 1 to 1000 (60 dB).

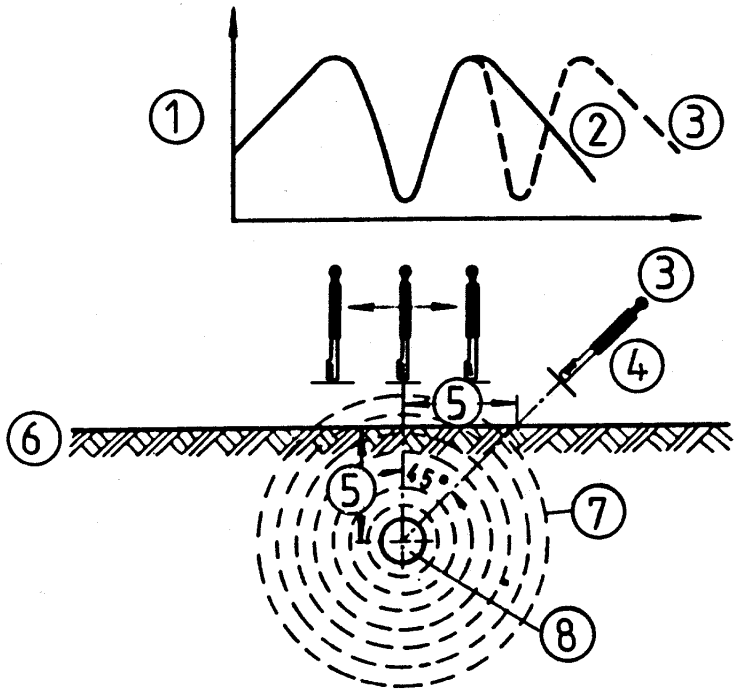

1) proportional indication to the intensity of the noise
2) curve 2: localisation of the pipeline
3) curve 3: determination of the depth of laying
4) receiving spool
5) depth of laying
6) ground level
7) line of the electric field
8) pipeline

Fig. 5-4 Localisation of a pipeline by means of alternating current (pipe locator)

Figure 5.4 shows that the voltage induced in the receiving spool reaches its minimum value when the lines of the field are perpendicular to the axis of the spool. In this case the receiving spool is exactly on the vertical of the pipeline. It is sufficient to have a slight lateral shift to get a component of the lines of the electric field in the direction of the axis of the spool. In this way a voltage is induced and gives rise to a noise that the listener perceives after amplification. Curve 2 in fig 5.4. represents the noise intensity. This

method locates with precision the section of pipeline searched for. If the spool for the survey is inclined at 45°, the least noise can be heard at a distance from the axis of the pipeline that corresponds to its depth of laying (figure 5.4 curve 3 dot line).
In the case of contact between two metallic structures the current delivered by the generator also flows into the other pipeline. The electromagnetic field of the pipeline connected to the generator noticeably decreases downstream the point of contact (figure 5.5), and particularly if the extraneous pipeline has a very low earth resistance. On the vertical of the extraneous pipeline, the spool can detect a noise of low intensity.

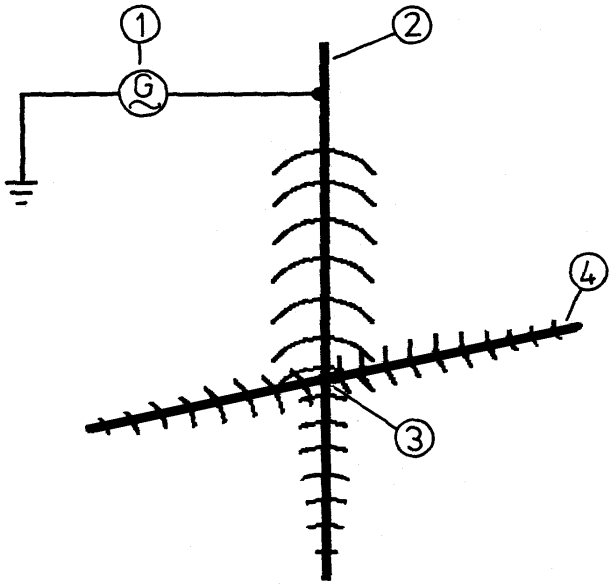

1) generator of audible frequencies
2) pipeline protected cathodically
3) point of contact to be located
4) extraneous pipeline

Fig. 5-5 Detection of contacts by means of alternating current

Pipe and cable locators that could be used directly for performing such measurements are today available on the market. Receivers equipped with filters for 100 Hertz that work only with the first harmonic of the transformer/rectifiers of cathodic protection are also available nowadays. The protective current delivered by the transformer/rectifier (Graetz bridge) contains 48% of alternating current at the frequency of 100 Hertz. With the help of a suitably calibrated rectifier, it is therefore possible to determine by the inductive effect the order of magnitude of dc current that escapes from the point of contact, thus locating the pipeline with better precision (if no inductive coupling exist with pipelines and nearby cables).

VI- LOCALISATION OF COATING FAULTS

In general, the coating of all the pipelines is verified in the factory and in the yard (paragraph 6.1) and the defects detected are eliminated.
The small defects that could remain don't have a significant influence on the effectiveness of the cathodic protection. But it is possible that more important defects arise during and after the pipe-laying. According to the type and the nature of the coating, the current necessary for the cathodic protection of the pipeline is different. For coal-tar coatings it may for instance be 30 $\mu A/m^2$, while for polyethylene coatings only 1 $\mu A/m^2$ is needed.

6.1 Localisation of the porosity and of the defects of the coating by using high voltage

It is possible to use high voltage devices to localise, before the excavation, defects and pore in the coatings of the pipelines.
This examination is performed with dc voltage or with impulses (teeth of saw shape). In the generating devices with impulses, the duration of discharge of the capacitors varies from 1 to 3 μs and the interval of the impulses is 50 ms.
The test voltage depends on the type and the thickness of the coating. As an indication, for the majority of coatings a value of about 5 KV/ mm is used.
In order to perform this high voltage test it is necessary to establish a connection between the pipeline and the device. This contact can be realised either directly by connecting the device and the pipeline (method used for verifications in factory) or by using an indirect contact by an earth (verifications in the yard). In this last case, the pipeline and the high voltage device are both grounded to earth (the pipeline through a stake, the device by means of a metallic chain dragged in the soil). The electrical continuity is provided by the soil. Figure 6.1 illustrates the connection of the device.

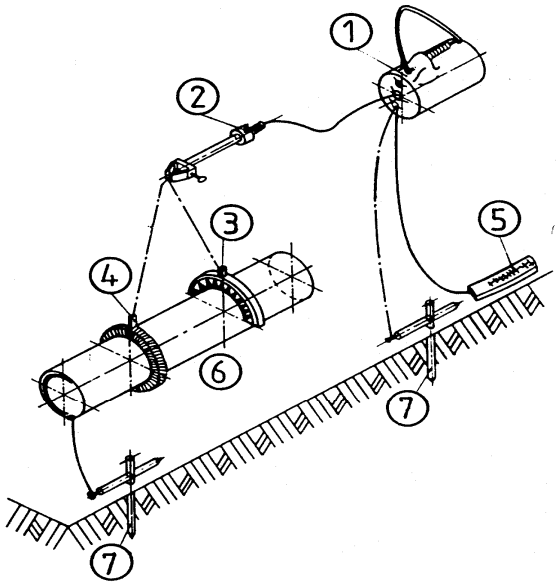

1) acoustic detector
2) electrode
3) metallic comb electrode
4) spiral electrode
5) mobile earthing of the detector
6) pipeline
7) earthing stakes

Fig. 6-1 Detection of the porosity with a high voltage device

The contact electrodes for the examination of the pipeline are constituted by metallic brushes, spiral metallic rings or probes made of conducing rubber.
The metallic brushes are used for the controls in factory and in yard for an accurate examination of pipeline fittings.
The spirals are used for the examination of the pipeline in yard; it is necessary to verify that the spiral sticks well on the circumference of the pipeline.
The rubber electrodes are used for small thickness coatings such as epoxy resins.
In any case attention is to be paid to perform these controls with the surface of the pipeline well cleaned up and dry.

6.2. Localisation of coating defects on buried pipelines

The defects can be detected with gradient measurement methods (e.g. Pearson method) by using both dc or ac currents, or with inductive methods.

6.2.1. Coating fault location by using DC potential gradients

When a dc current is used the IR drop of voltage in the soil caused in correspondence of the defects of the coating is measured by means of electrodes placed at the soil surface on the vertical of the pipeline (see chapter 2.4).

The ray r_O of the defect, assumed to be circular, can be estimated from the measure of the potential gradient ΔU detected at the surface of the soil and of $\mathbf{U_{on}}$ and $\mathbf{U_{off}}$ potential according to the formula:

$$[ro] = F(x, t) \frac{\Delta U}{\mathbf{U_{on}} - \mathbf{U_{off}}} \qquad (6.1)$$

where x and t are respectively the distance between the two electrodes for the measure of the gradient and the depth of the pipeline. The values corresponding to the F factor (x, t) can be taken on the curves of figure 6.2.

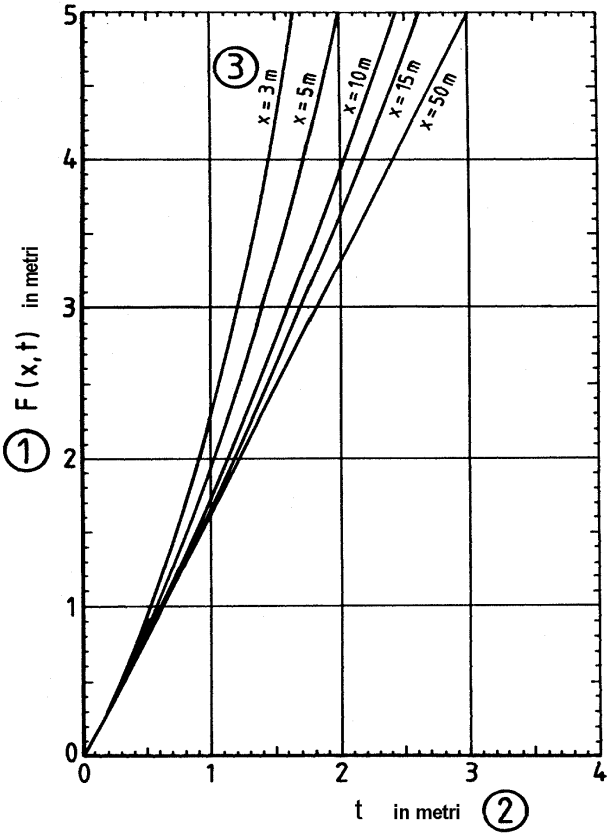

1) F coefficient (x, t), according to the equation 6.1
2) t= soil thickness (burial depth) in metres
3) x= distance in meters between the electrodes of measure of the gradient

Fig. 6-2 Course of the F coefficient (x, t) according to the equation 6.1, for the estimation of the dimensions of a coating defect

In the cases in which the soil has, in the immediate vicinity of the pipeline, a resistivity lower than that where the measure of the gradient is performed, the values of r_0 so determined are greater than the true values.

6.2.2. Coating fault location by using AC potential gradients

The detection by using alternating current takes place with the Pearson method. In order to perform this method, a generator with audible frequency described at par. 5.2. is used. The lines of current that converge toward the defect reach, exactly like for the continuous current, the surface of the soil where the difference of potential is detected by two persons provided with stakes of measure (poles) or footwear with harpoons that ensure contact with the soil. When the two people move one behind the other along the pipeline or at a side to the other (see figure 6.3), in proximity of the defect a point of double or single voltage is obtained (see figure 6.3 curve 1).

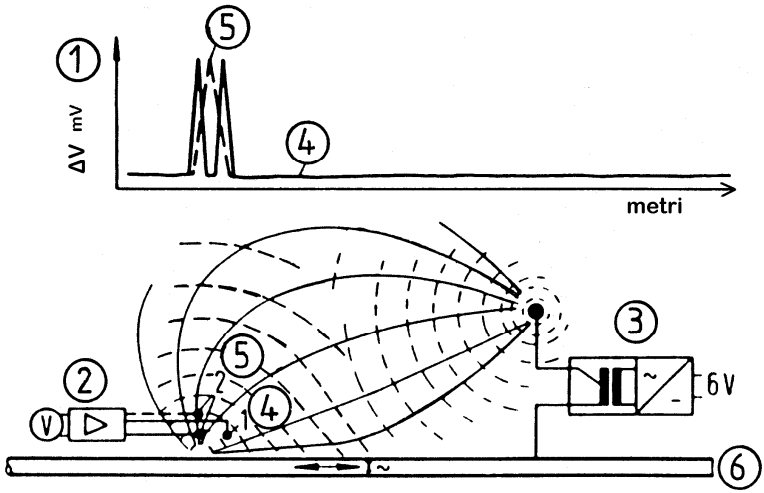

1) indication of the device (proportional to the sound intensity)
2) receiver
3) transmitter
4) parallel to the pipeline: continuous line
5) perpendicularly to the pipeline: dotted line 6) pipeline

Fig. 6-3 Localisation of defects of the coating with the Pearson method

Such voltage peaks is measured with the help of a detector or signalled acoustically through an amplifier. In order to avoid differences of noise intensity due to the different resistances

between the points of measure, the use of impedance amplifiers with relatively high values (around 100 KΩ) is necessary.
The pipe locators used for this kind of measurements have amplifiers whose internal impedance is in the order of KΩ.

6.2.3. Localisation of coating defects with inductive measurements

It is possible to locate isolation defects, or find section of pipelines whose resistance is lower than the average value of the structure, by means of a method that uses the alternating induced voltage due to a current of the same nature injected in the structure to be examined.
This localisation allows more precise methods to be applied, necessarily longer and more expensive to perform, such as the Pearson, whose measurements are closer to each other, only to the areas with lower value of isolation. In order to apply this method, an alternating current with audible frequency is introduced in the pipeline (around 1 KHertz) having constant intensity. By using an ac voltmeter, the voltage induced from such current is measured with a coil placed tangentiallyto and above the pipeline, at a certain height. This voltage is proportional to the current that circulates in the pipeline.
The attenuation of the current relevant to the distance where the current has been injected is expressed in Decibels and can be determined according to the formula:

$$dB = 20 \log \frac{U_i}{U_n} \qquad (6.2)$$

where Ui é the voltage measured to the point of injection of the current and U_n the voltage detected at the point of measure.

The values so calculated are then shown in a diagram (see figure 6.4).

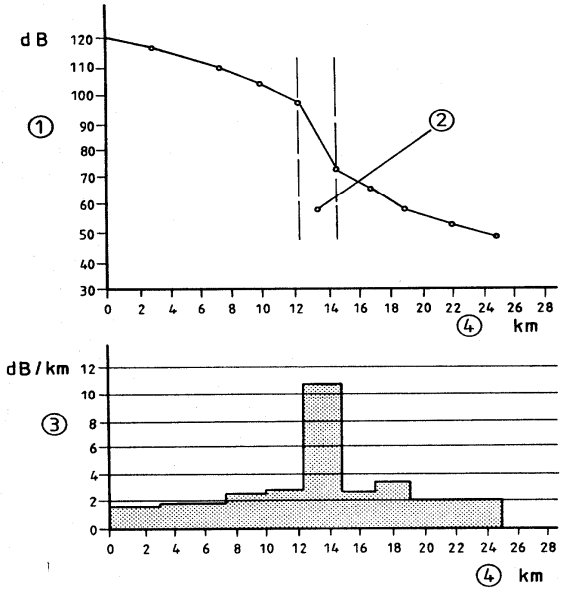

1) intensity of the signal in frequency
2) area with defects of the coating
3) attenuation of the signal
4) distance from the point of injection

Fig. 6-4 Value of the signal in acoustic frequency with the inductive measurements

On this diagram one can note that the bigger coating defects give rise to an increase of the inclination of the curve, thus revealing the area where they are situated.
Currently on the market inductive receivers are available with more spools that directly the measure of the depth of the pipeline and they give directly without any need of calculations the attenuation of the current,

VII- MEASUREMENTS OF INTERFERENCES DUE TO CATHODIC PROTECTION CURRENT

The current of cathodic protection causes, in the vicinity of the anodes and nearby the defects of the coating, IR drop of voltage in the soil that could be a very detrimental influence on the installations buried nearby (see the Practical Guideline of the Cathodic Protection I Chapt, 5.4).

7.1 Voltage cones

Figure 7.1 shows a scheme of potential variations of the soil influenced by a cathodic protection station, and shows how, because of the current, the potential of the soil measured towards a distant and neutral earthincreases by some tens of volts near the anodes, while near the protected structure this potential only decreases by some hundreds of mV.

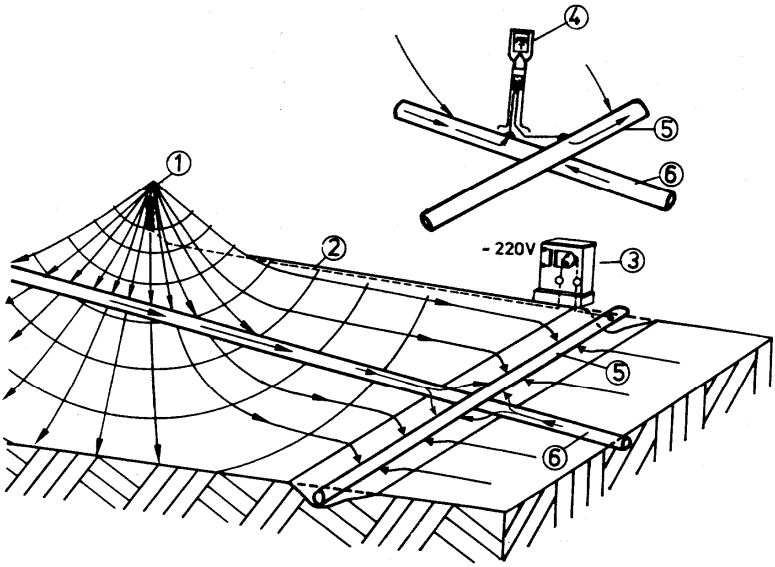

1) vertical ground-bed
2) cable to the anode
3) transformer/ rectifier
4) equipotential connection for eliminating the interference
5) pipeline protected cathodically
6) pipeline not protected (interfered)

Fig. 7-1 Anodic and cathodic cones of voltage, due to an impressed current cathodic protection station

The field of potential around the ground-bed is called the cone of anodic voltage and those nearby the defects of the protected structure cones of cathodic voltage.
In general line, the interference from a structure protected cathodically to an extraneous structure will be weaker as the distance between the two works increases.

7.1.1. Anodic voltage cone

Because the dimensions of the ground-bed are small as regards the surface of the pipeline to be protected, in the soil around its area a bigger gradient is present due to the higher current density.
The equations of Table 4.2 allow the calculation of the extension and the dimension of the voltage cone according to the current density, of the resistivity of the soil, of the form of the anode and of the applied voltage. But the extension of the voltage cone is not a well defined element and also depends on the disposition of the anodes and on the applied voltage. Starting from a certain distance from the horizontal shallow anodes, the potential in the soil decreases inversely proportional to the distance so that at some hundreds of metres the value of the potential notably decreases.
The equipotential lines nearby the anodes of a ground-bed installed at depth are of circular form, while those around the horizontal anodes buried at the surface (shallow ground-bed) are elliptical and become of circular form at a distance.
In these cases the cone of voltage tightens in the direction of the axis of the anode following the function (1/x) while, perpendicular to the ground-bed only according to a Log (1/ x) function.
Figure 7.2 represents the relationship of the voltages U_Z / U_A for different lengths of horizontal ground-bed. Uz represents the potential of a point placed at the surface of the soil placed at the remote earth, therefore approximately the pipe to soil voltage.
z is the perpendicular distance that separates such a point from the median point of the anodes of the ground-bed.
UA is the voltage applied to the anodes, that corresponds approximately to the output voltage of the Cathodic Protection Feeder (transformer/ rectifier).

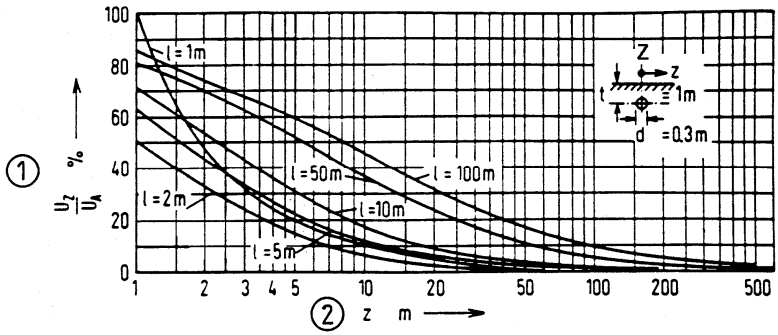

1) relationship between the voltages U_z/U_a (ratio of the voltage on the surface of the soil in a z point, and the voltage to the anodes)

2) z= distance in the z direction, measured from the centre of the ground-bed

Fig. 7-2 Cone of voltage around the anodes of a horizontal ground-bed, measured in the z direction (perpendicularly to the centre of the ground-bed)

The figure 7.3 represents the variation of the relationship U_x/U_a according to a parallel direction to the axes of the anodes of the ground-bed.
x represents the distance of a point in the soil from the extremities of the anodes.

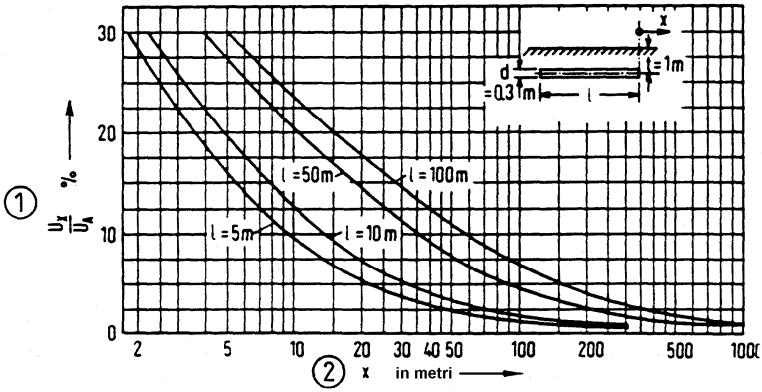

1) relationship between the voltages U_x/U_a (ratio of the voltage on the surface of the soil in a x point, and the voltage to the anodes)
2) x= distance in meters along the x axle, measured from the last anode of the ground-bed

Fig. 7-3 Cone of voltage that develops about to a ground-bed with horizontal anodes, measured in the x direction (axis of the ground-bed)

The variation of potential in the cathodic sense of an extraneous pipeline that crosses the anodic voltage cone of a cathodic protection station, must be the lowest possible. It should not exceed 0.5 V. The variation of potential in the anodic sense of an extraneous pipeline must be looked for outside the anodic cone of the protected pipeline. If the requirement of protective current is high, the pipeline protected cathodically is almost always inside the cone of voltage of the anodes of the ground-bed.
But there is a much more important element than the distance that separates the anodes of the ground-bed from the pipeline protected cathodically. This is the distance from of CP station (ground-bed) from extraneous pipelines. This aspect is treated at the paragraph 5.4 of the Practical Guideline of the Cathodic Protection.

7.1.2 Cathodic voltage cone

The current of cathodic protection sent toward the pipeline causes a cone of cathodic voltage in the soil in correspondence to each coating fault of the pipeline. Such IR drop of voltage $\varphi_{(r)}$ grows proportionally to the resistivity ρ of the ground and to the density of the current of protection (σ)

$$\varphi_{(r)} = (7.1)\ \sigma\ \rho \frac{d}{2} \text{ Ln } (r) + C \qquad (7.1)$$

r= distance between a point of the soil and the pipeline
d= diameter of the pipeline
C= constant of integration

In presence of numerous defects nearby each other, the different cones of voltage are summed to form a global cylindrical voltage field that envelops the pipeline. For relatively old pipelines with numerous coating defects and whose average protective current density is around mA/m^2, a distribution of potential could be derived from the equation 7.1.

The figure 7.4 represents the distribution of the current and the cone of voltage that develops around a defect of coating of a cathodically protected pipeline and the potential of the interfered pipeline.

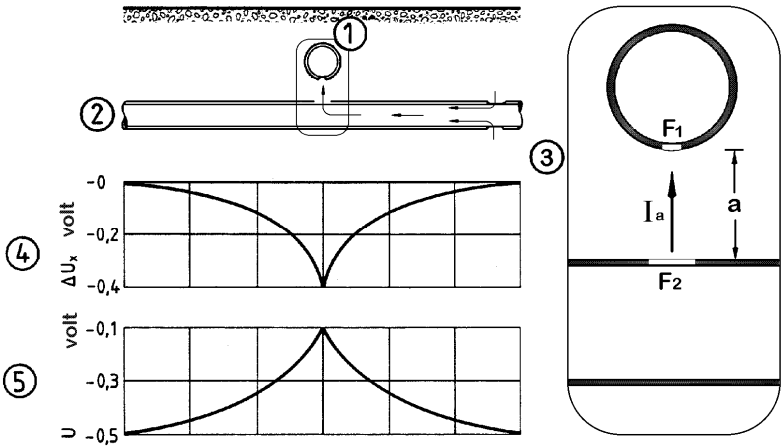

1) pipeline protected cathodically
2) interfered pipeline
3) current of protection
4) cone of voltage in correspondence of a defect of the coating of a pipeline

Fig. 7-4 Division of the current and cone of Ux voltage in correspondence of a defect of the coating of a pipeline protected cathodically and course of the pipe to soil potential of an interfered pipeline

The high cathodic protection current needed for very old pipelines is often due to the presence of fittings which are not isolated, weldings not well coated, or completely bare, or to metallic contacts with extraneous pipelines or with casings without isolation. Taking into account the very high current density necessary to protect bare metallic surfaces buried in the soil, voltage cones of hundreds of mV result so that often the level potential of cathodic necessary to protect the pipeline is not achieved.
For new pipelines with coatings with very high electrical resistance, the defects are in general very rare. Pipelines belonging to third parties situated inside such voltage cones could be highly interfered.
The potential towards the remote earth of a single defect F1 having ray r1 of a cathodically protected pipeline is equal Uo. If the potential of a defect F2 with ray r2 of an interfered pipeline that

placed at a distance ***a*** from the defect F1, we could calculate the potential of the cone of cathodic voltage in correspondence to the defect F2 in the following way:

$$\varphi_1 = \frac{2}{\pi} \cdot U_o \cdot \text{arctg} \frac{r_1}{a} \qquad (7.2)$$

the current on the defect F2 corresponding to the density **J**, because of the resistance towards earth $\rho/4r_2$ of the defect, gives rise to a potential towards the remote earth of:

$$\varphi_2 = I_a \cdot \frac{\rho}{4r_2} = \sigma \cdot \frac{\pi\rho}{4} r_2 \qquad (7.3)$$

Because $\varphi_1=\varphi_2$, the current density is:

$$\sigma = \frac{8\,U_o}{\pi^2 \rho \cdot r_2} \cdot \text{arctg} \frac{r_1}{a} \qquad (7.4)$$

and because ***a*** >> di r_1

$$\sigma = \frac{8 \cdot U_o\, r_1}{\pi^2 a \cdot \rho \cdot r_2} \qquad (7.5)$$

In order to reduce the interference it is necessary to decrease **J** and, consequently:

- to repair the defect so that r1= 0
- to assure the connection of the pipeline interfered with to a sacrificial anode having sufficient surface.

r2 becomes in this way very big and accordingly the current density decreases.

It is not generally possible to modify the typical parameters of the site such as ***a*** and ρ.

7.2. Methods for measurements

7.2.1 Measurement of interference caused by installations cathodically protected

A detrimental interference can be evaluated by means of potential measurements to be performed on the extraneous pipeline in the area of the cone of voltage. In order to perform such a measurements the protective current of the cathodically protected pipeline is to be switched OFF for a short duration.

When the current is switched ON, if the potential of the extraneous pipeline becomes more positive, the interference is due to the cone of anodic voltage. If, on the contrary, an increase of the potential in the negative direction is ascertained, the interference is due to the cone of cathodic voltage. Such interference could be higher than the allowed threshold value. The potential thus measured includes, in addition to the true potential, also an IR drop in the soil. The variation of the real potential produced by this interference in general cannot be measured in practice. A diminution of the real potential of 20 mV causes the doubling of the speed of corrosion. At the moment no method is available to measure this variation of the real potential.

If the measure of the potential of the extraneous pipeline cannot be performed information on the unfavourable interference areas to measure the voltage cones is not available.

The following procedure is usually adopted: a reference electrode is placed on the vertical of the interfered pipeline and another at least 10 m away from the two pipelines. The difference of the gradients of the potentials measured when the protective current is switched ON and OFF corresponds to the modification of the potential of the interfered pipeline.

The measure of the interference is performed with a millivoltmeter or with a recording device. For this measurement, the reference electrodes will be set as near as possible to the pipelines and, if possible, between the two pipelines.

When the above methods don't give satisfactory results, to understand the effect of coating faults between two pipelines the following method could be used.

In the point of presumed interference a metallic stake having a known surface area is plunged in the soil and connected to the pipelines. The distance between the two stakes is equal to the distance that separates the pipelines. The buried parts of the stakes represent coating defects of around 100 cm2. Subsequently the currents circulating on these stakes are observed (taking care

of the versus and the intensities of such currents) together with the variations of their potential when the CP system of the interfering pipeline is switched On and Off.
In many cases this method makes it possible to fully understand an interference between two structures, above all in presence of stray currents.

7.2.2 Measure of interferences caused by traction systems fed with DC

If a pipeline in situated in an area interfered by a railroad fed with dc or if the interference is highlighted by a routine control, the potentials arising from these stray current along the pipeline should be recorded according to the scheme of fig. 7.5., during a period of normal railway traffic. The duration of the recording depends on the intensity of the railway traffic. If the traffic is regular during the day, recording of potential for about one hour is sufficient. If, on the contrary, the circulation of the trains is irregular, with heavy traffic transit followed by absence of traffic, it is preferable to perform recordings for a duration of 24 hours and also longer, if necessary.

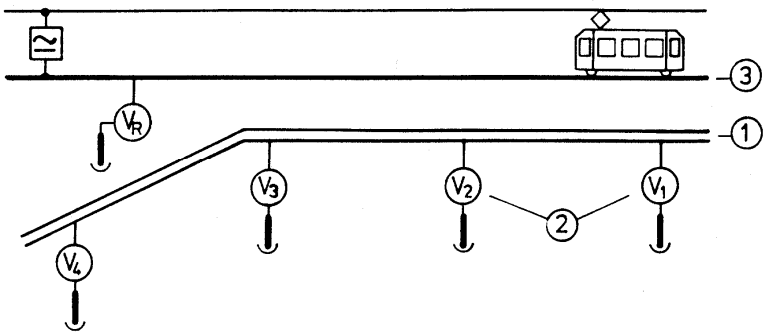

1) pipeline 2) points of measure 3) rail

Fig. 7-5 Disposition of the points of measure to detect the interference due to stray current on a pipeline

By simultaneous examination of the recorded values, the areas where the variations of potential in the anodic direction are

maximum must be searched. The average value of these variation is then calculated. If such an average value exceeds an allowed limit value (for example 100mV in Germany), provisions must be taken for the protection of the pipeline.
In order to decide the method of protection, the simultaneous measurement of the potentials of the rail and of the pipeline where the interference is maximum (fig. 7.6) must be performed.
If during the recording the potential of the rails remains for most of the time more negative than that of the pipeline, the solution could be to install a drainage station. If that is not possible, the interference due to stray current could be nullified by means of an automatically controlled cathodic protection station (see Practical Guidelines to Cathodic Protection 4.4.1. and 4.4.2.).

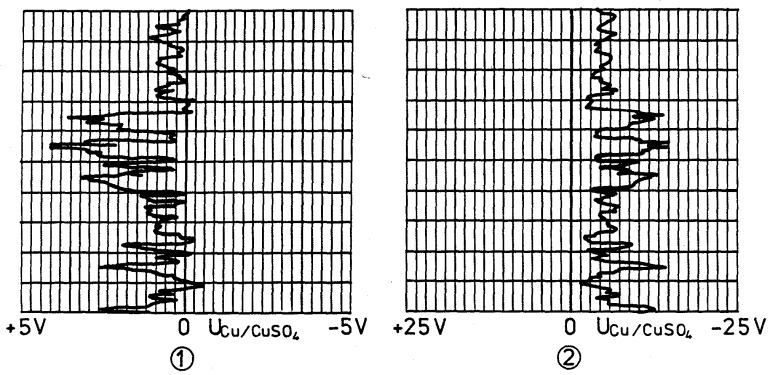

1) potential of the pipeline 2) potential of rail

Fig. 7-6 Potential of the pipeline interfered in the point V3 and of the rail in proximity of the point V3, according to the disposition of Fig. 7-5 (the maximum interference is detected at in the point V3).

VIII- MEASUREMENTS OF INTERFERENCES DUE TO ALTERNATING CURRENT

8.1 Interference due to alternating current

High values of alternating voltage could be present in the pipelines buried in the soil because of the electromagnetic induction due to railway lines or high voltage electric lines (see also chapter 7 of the Practical Guidelines to Cathodic Protection).

Such alternating induced current could disturb the measurements for the control of the cathodic protection of the pipeline. In fact errors of measure could derive from the employment of unproper devices if big signals in alternating current are added to dc current and voltages.

Such alternating induced voltages could represent a risk both for the installations and for the working personnel. In certain condition the alternating current can also be the cause of corrosive attacks on pipelines protected cathodically (also see chapter 2.1.4. of the Practical Guidelines to Cathodic Protection).

The entity of the interference caused by alternating current could be measured directly on the influenced pipeline, or calculated by means of computer programs.

Such calculations could be performed by companies which produce electricity or specialist computer firms with the necessary programs.

These calculations are of great importance above all in planning laying of new pipelines so that the necessary measures to be adopted to avoid or reduce such interference can be taken in the construction phase of the structure (for instance the installation of earths parallel to the pipeline).

8.2. Devices for measurements

The instrumentation to be used for detecting ac interference on a pipeline protected cathodically should be able to measure both dc and ac voltages having frequencies of 15- 100 Hertz.

The use of multimeters is ideal, having the same linear scale and the same range of measurements both in dc and ac, with an energy consumption as low as possible.

Measurements could be made by using analog or digital instruments.

The form of the signal and its frequency can be analysed by means of a portable oscilloscope.

The entity of the interference arising from a railway line fed in ac can vary very much, according to the volume of train traffic. In these cases it is necessary to record the induced interference for a sufficient period of time. Any recording tools of recent construction also measure for short periods of time, the average, minimum and maximum values under examination.

8.3. Procedures for the measurement of the interference

The interference from alternating induced current on a pipeline can be established in two ways:

a) by measuring the ac voltage towards the neutral earth;

b) by measuring density of ac' on a calibrated probe, in order to evaluate the risk of corrosion due to alternating current.

The measure of the voltage towards the neutral earth can be performed on the usual test points. The voltage difference between pipeline and a stake in the soil to at least 20 m from the pipeline is measured. By using this method at least 95% of the cones of voltage (in alternating current) that develop between the pipeline and the earth are measured.
To locate a short duration interference, a test current can be used in the line previously taken out of service.
To eliminate the error due to the overlap of other ac perturbating voltages, particular methods should be used (periodical immission of ac or inversion of the polarities).
To measure ac density of current, a metallic probe is buried and connected to the pipeline with a temporary cable. This probe must be put in the same type of soil as the pipeline has been laid in. Its surface is selected equal to 1 cm2. Both cp and ac currents entering the probe are measured with the appropriate tools and converted to density of current (A/m^2 o mA/m^2).
The use of temporary probes, installed at the same moment or just before the measurement, gives rise to significant errors of interpretation. In fact, the resistance of a probe permanently connected for long periods to the pipeline varies in time, because of the deposit of products of the cathodic reaction on the bare surface of the probe. This reaction could not be completed immediately in the probes which have been installed only temporarily at the moment of the measurements.